JANOSIK

Montážny návod

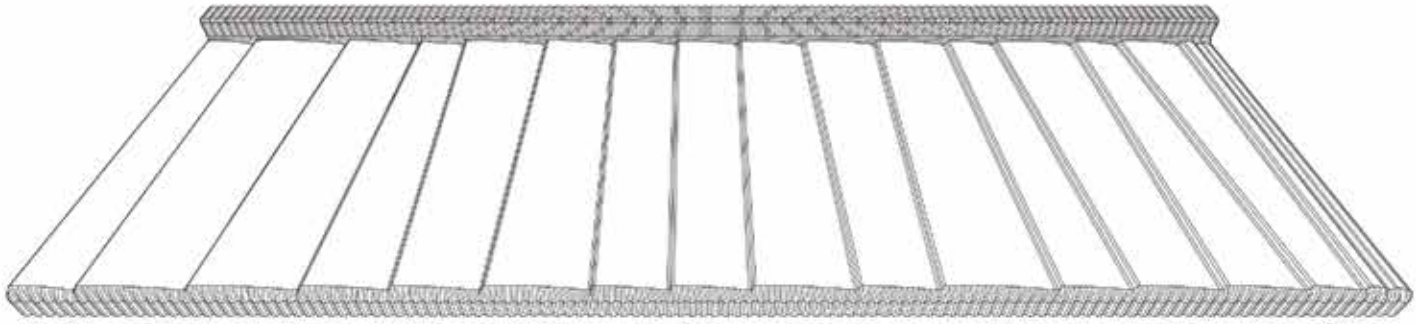

BLACHOTRAPEZ®

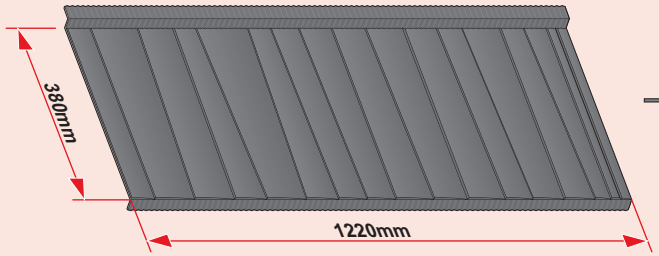
380mm
1220mm

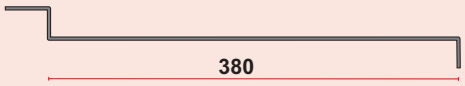
380

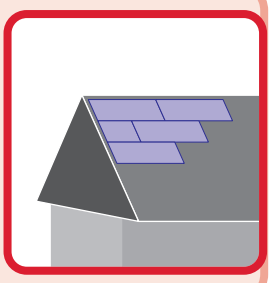

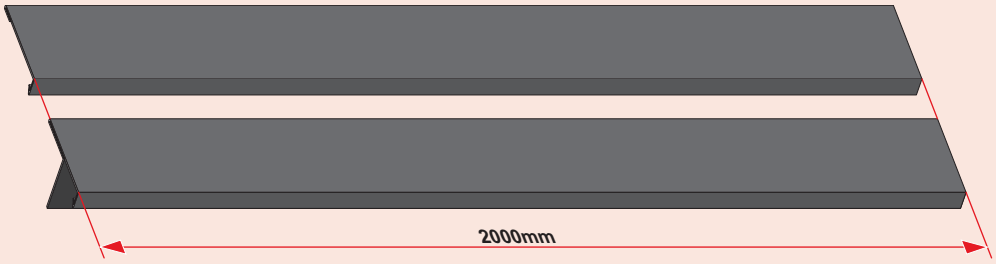
2000mm

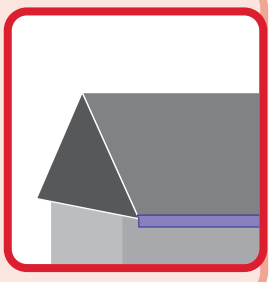

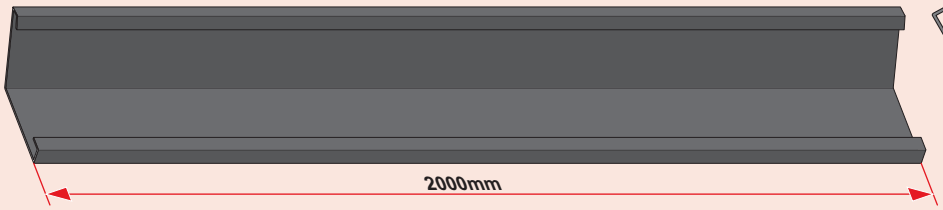
2000mm

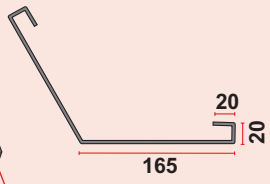
20
20
165

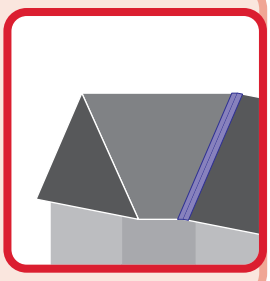

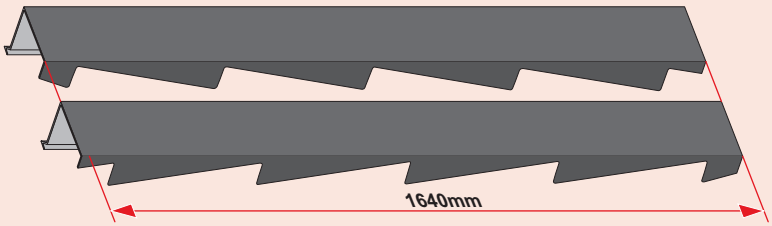
1640mm

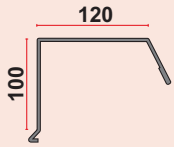
120
100

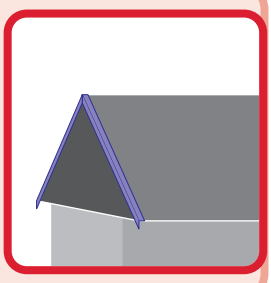

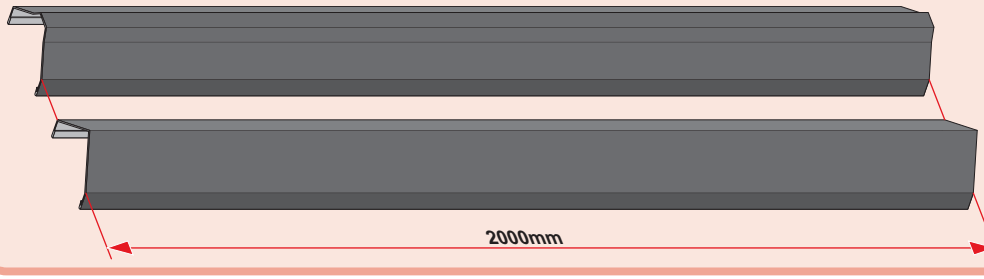
2000mm

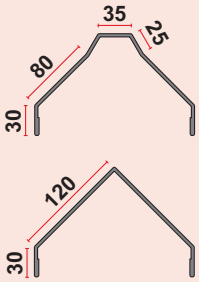
35
25
80
30
120
30

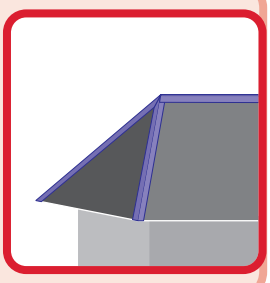

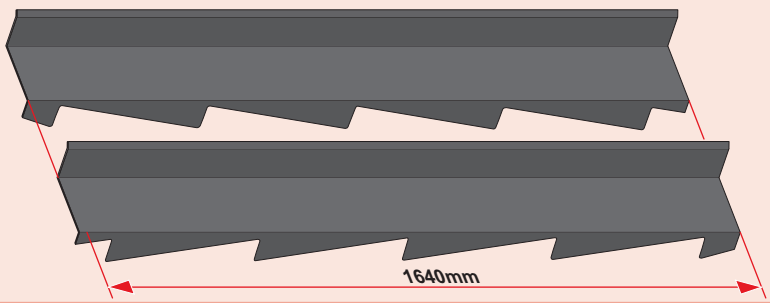
1640mm

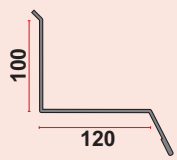
100
120

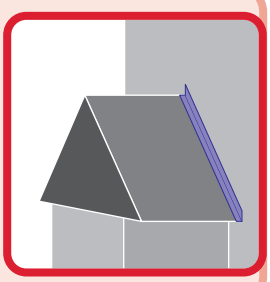

1

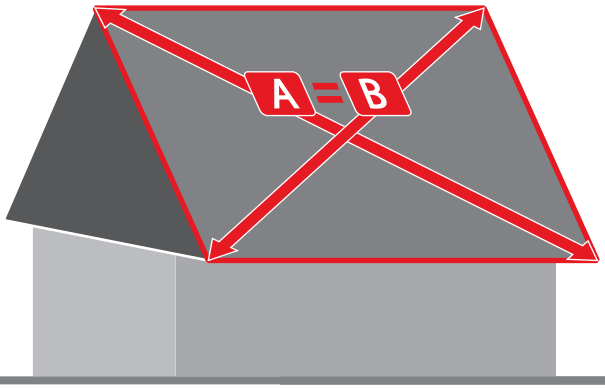

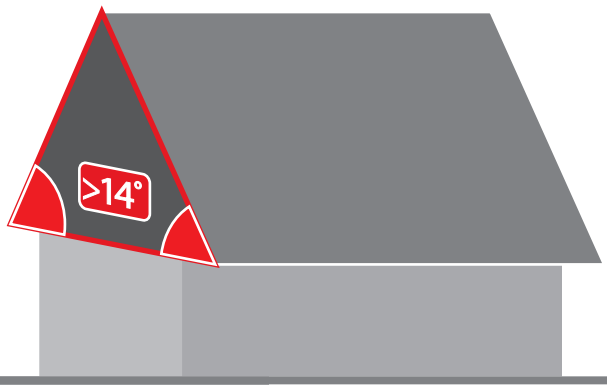

2

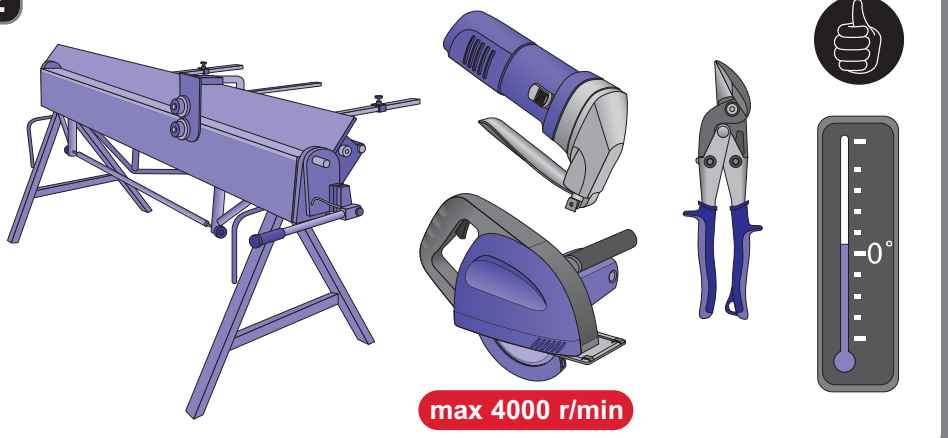

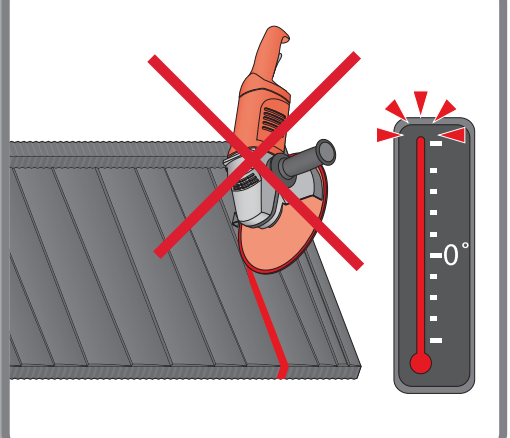

3

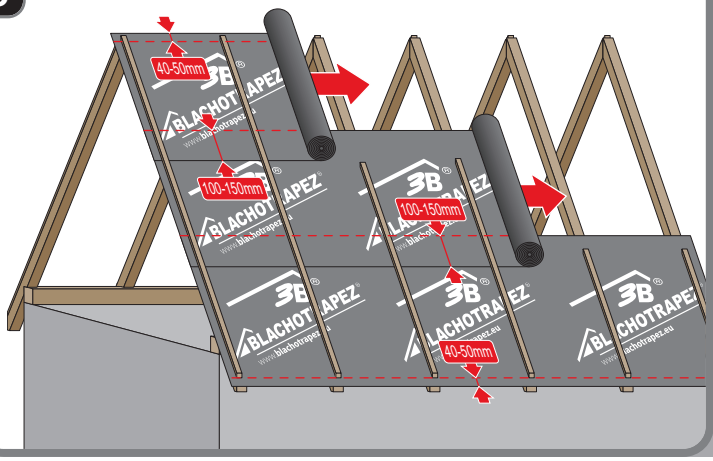

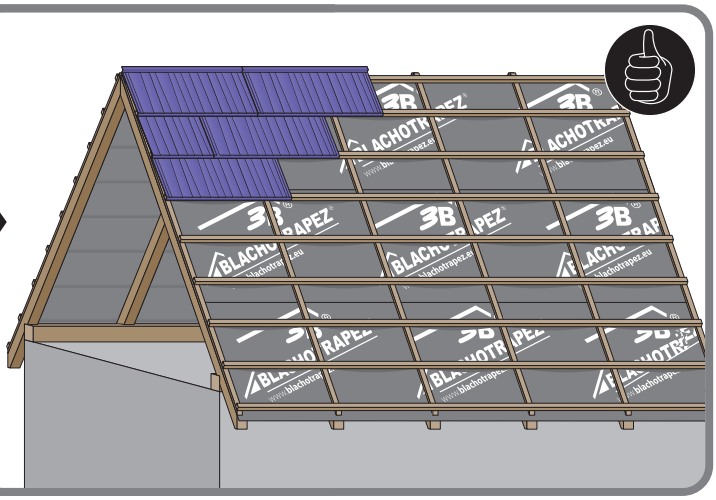

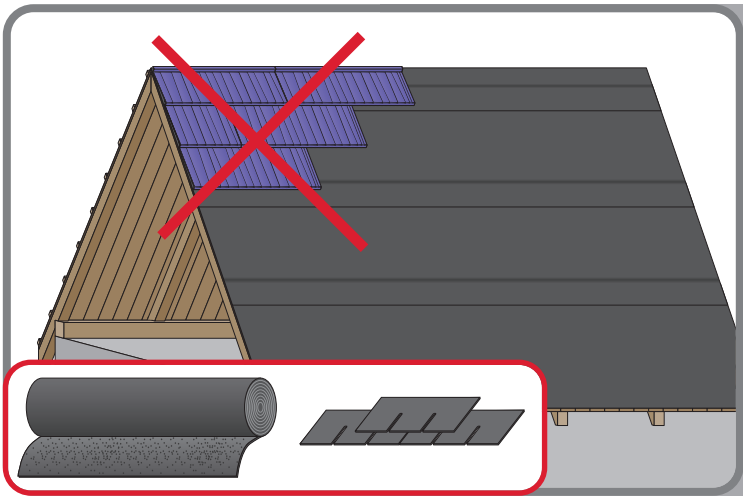

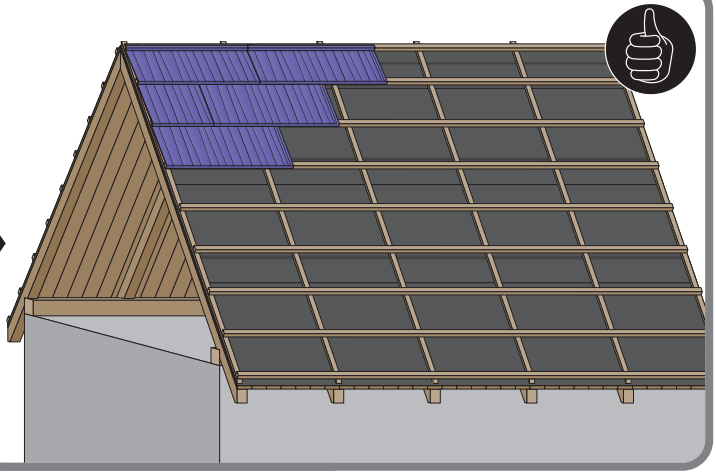

4a

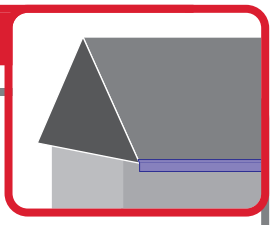

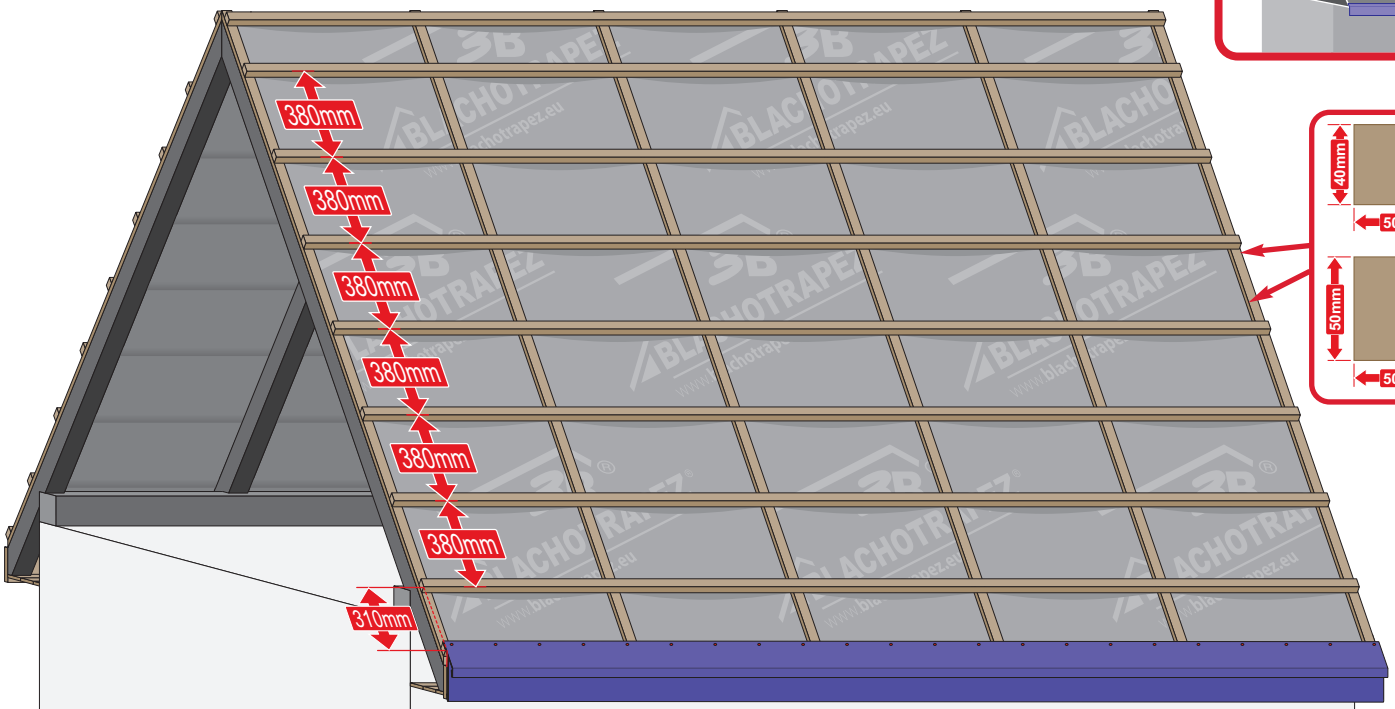
380mm
380mm
380mm
380mm
380mm
380mm
310mm

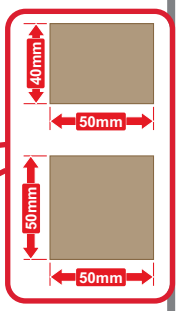
40mm
50mm
50mm
50mm

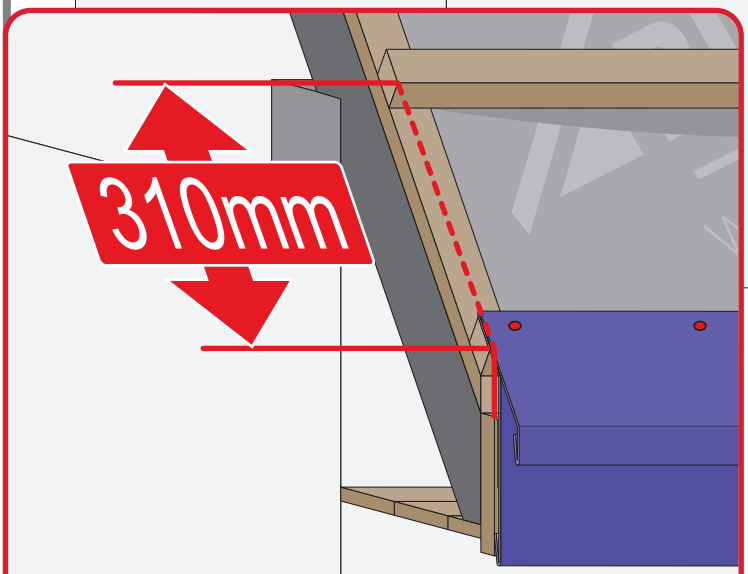
310mm

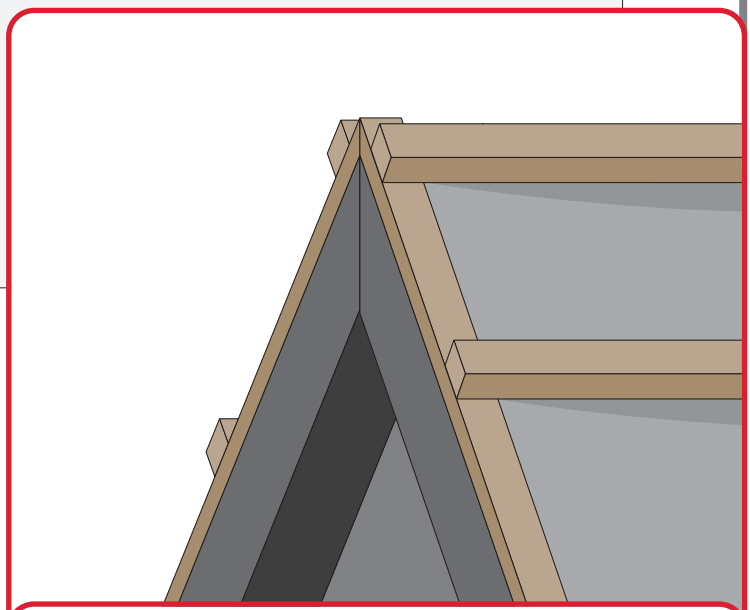

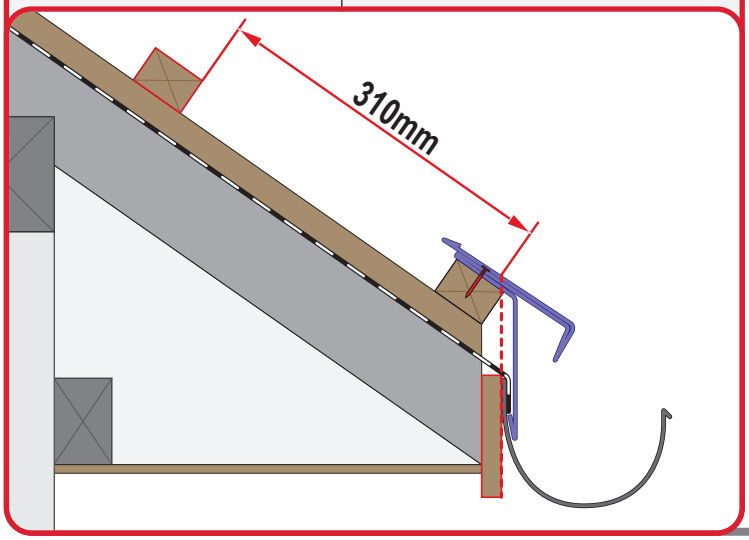
310mm

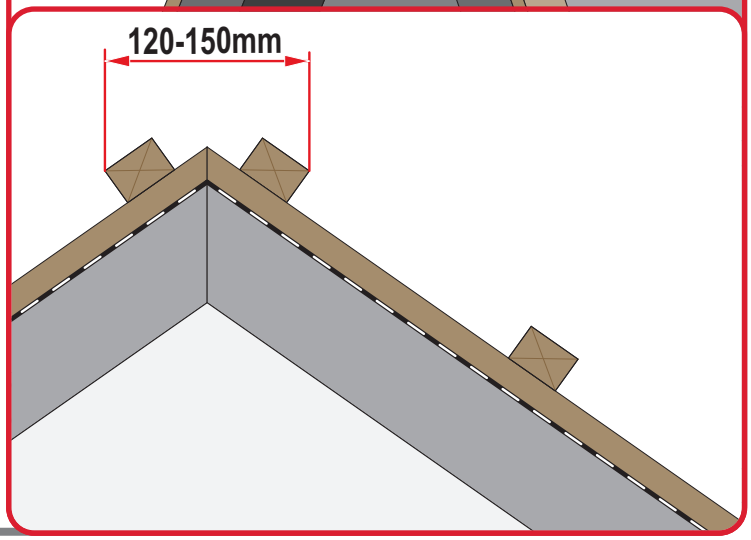
120-150mm

4b

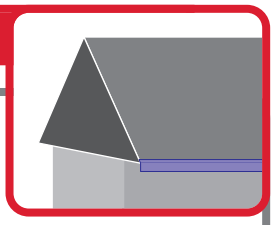

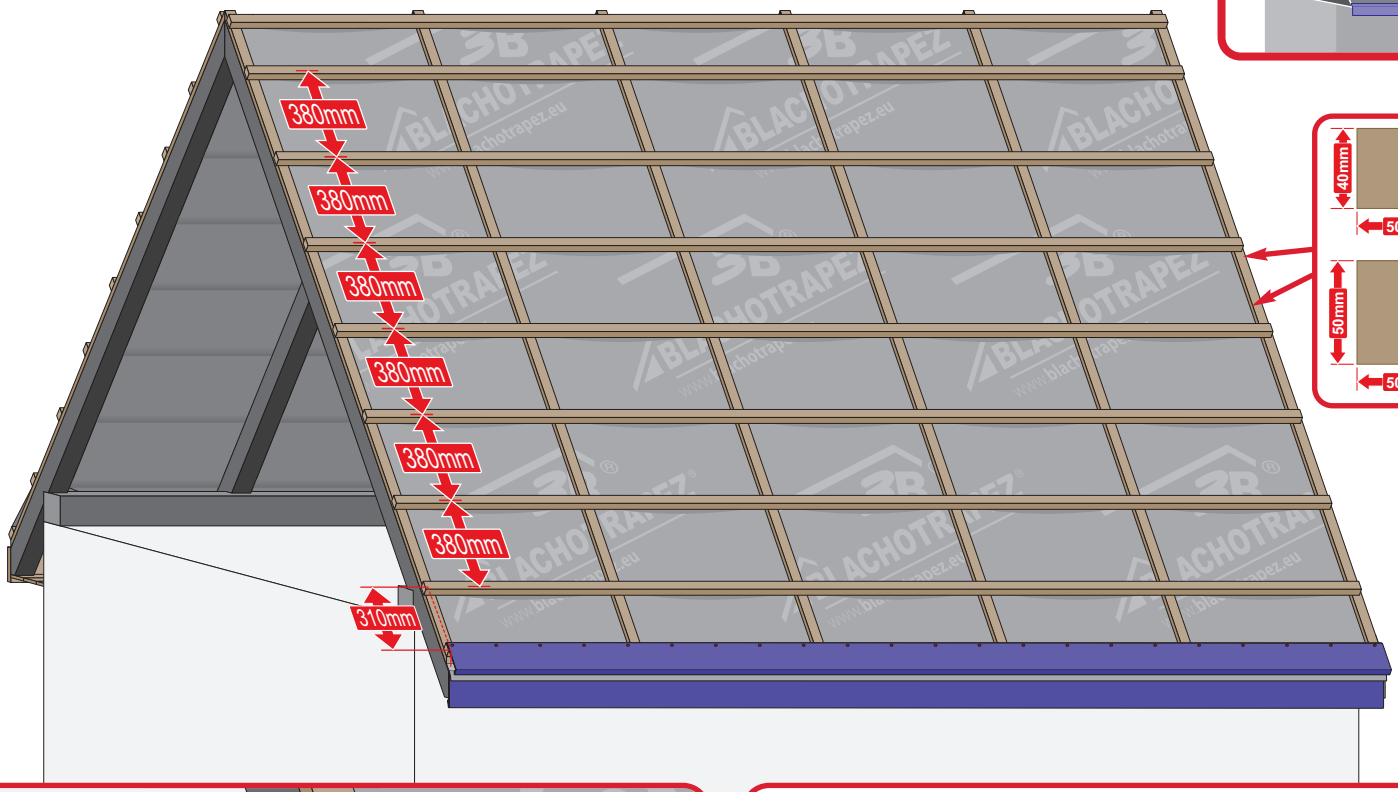
380mm
380mm
380mm
380mm
380mm
380mm
310mm

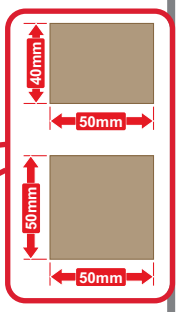
40mm
50mm
50mm
50mm

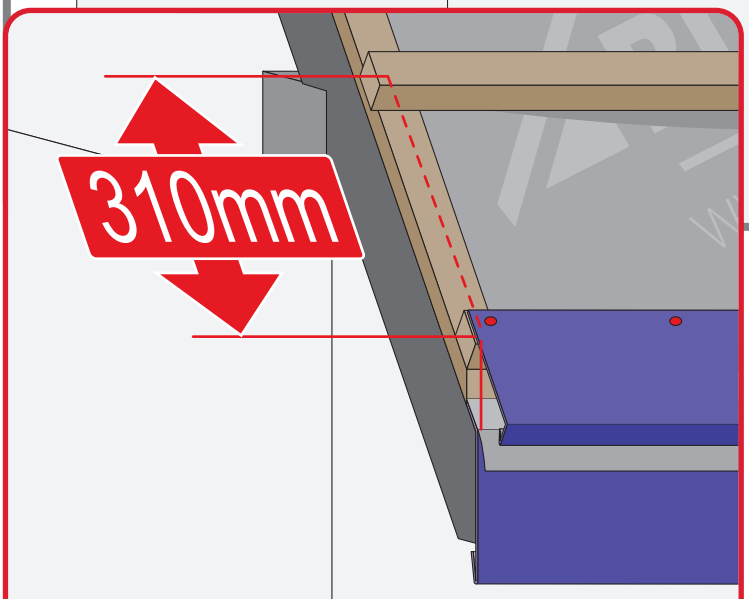
310mm

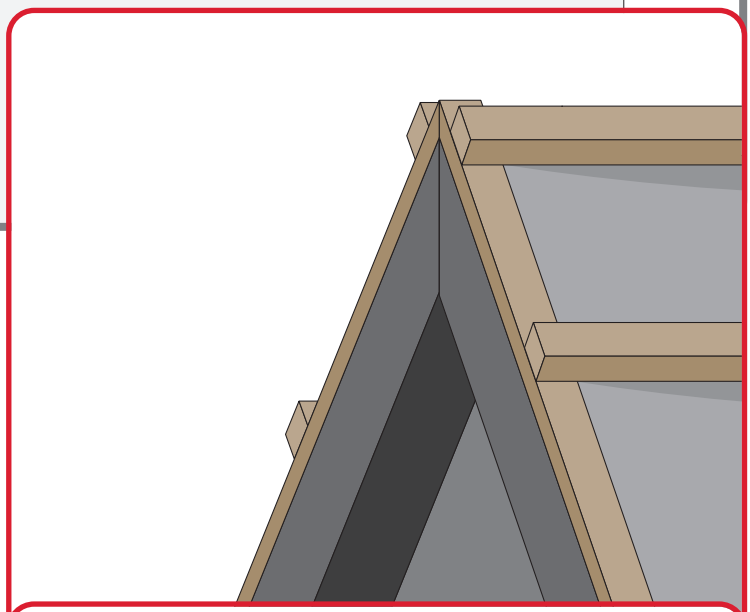

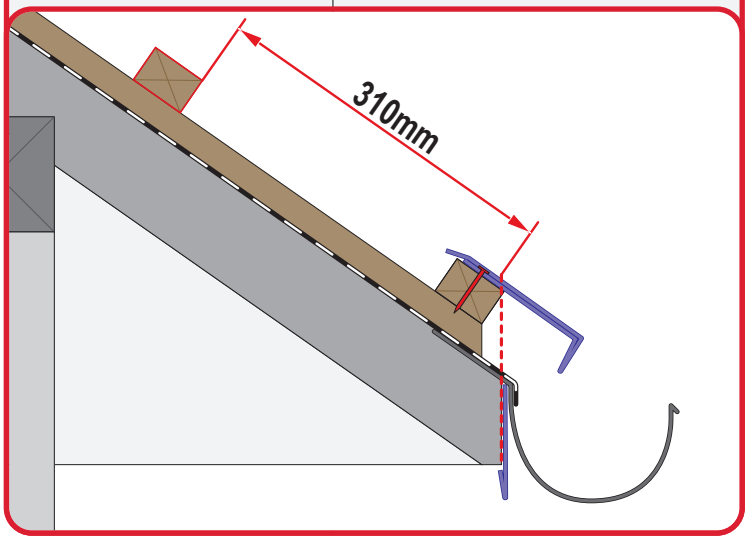
310mm

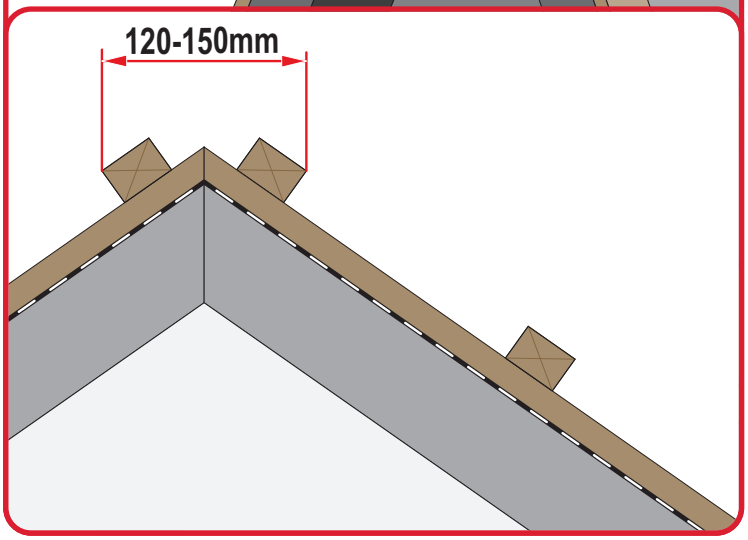
120-150mm

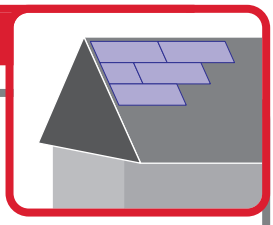

5a

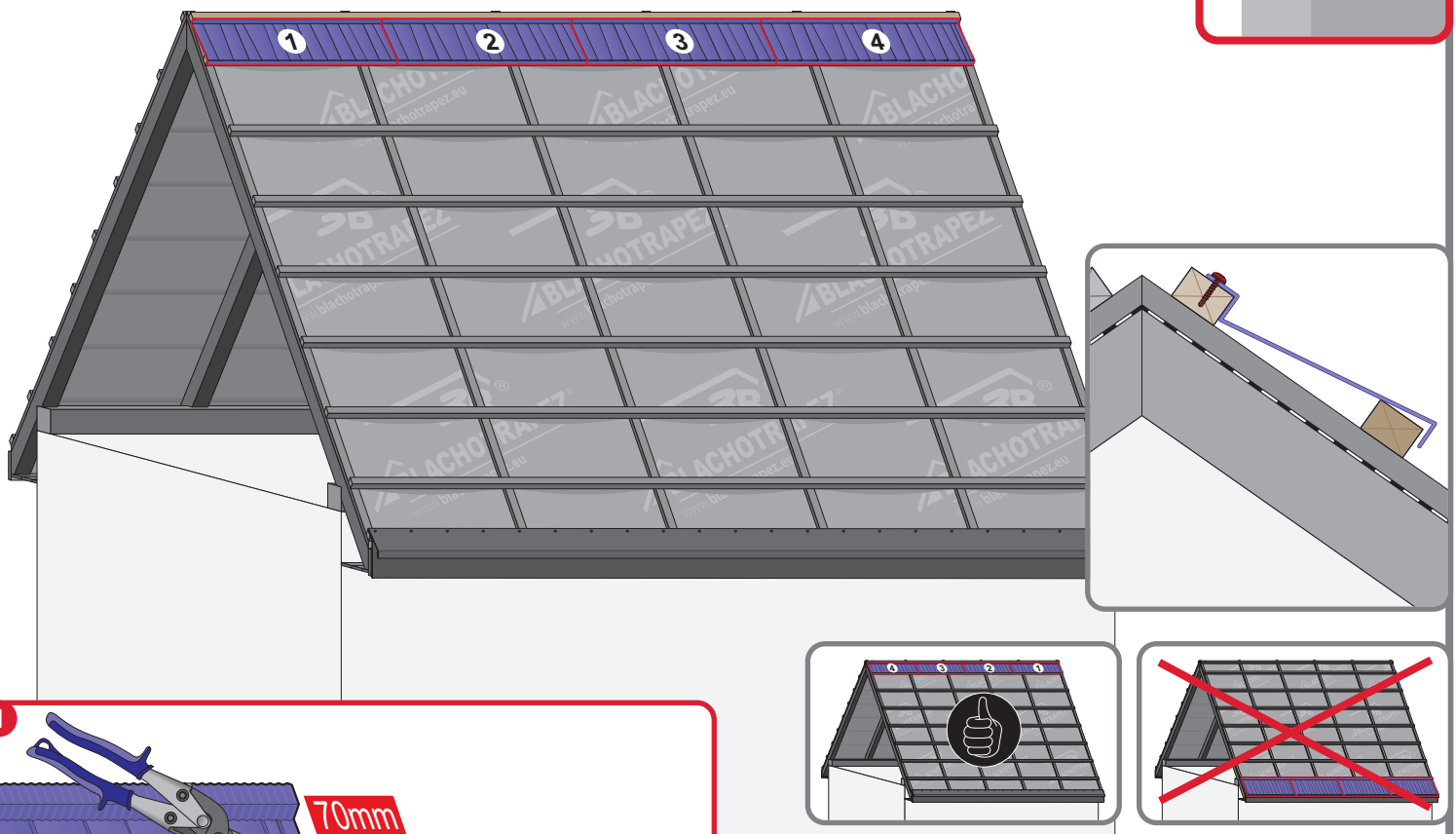

1

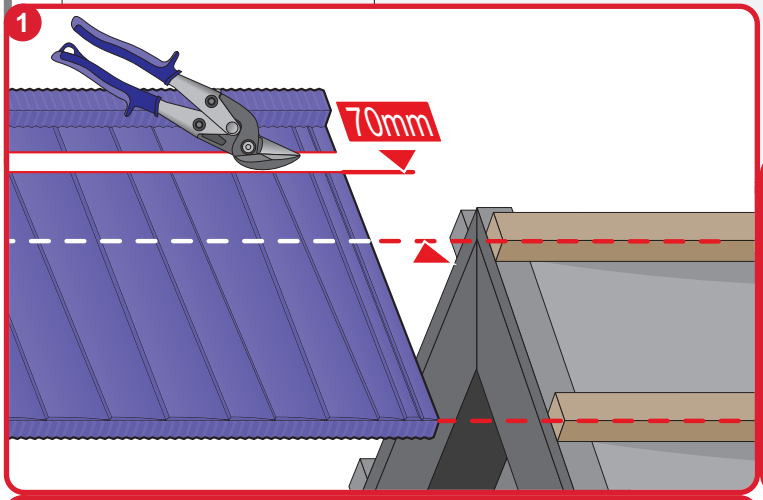

2

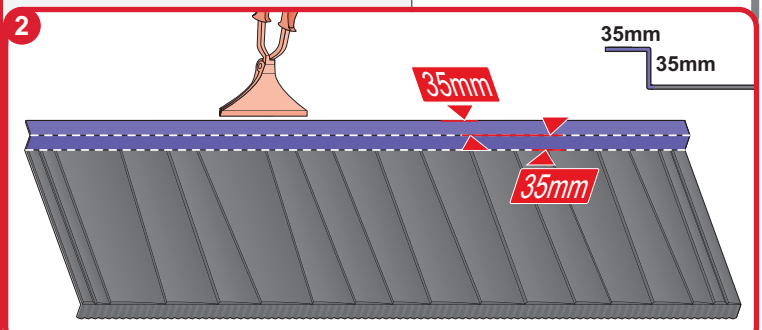

3

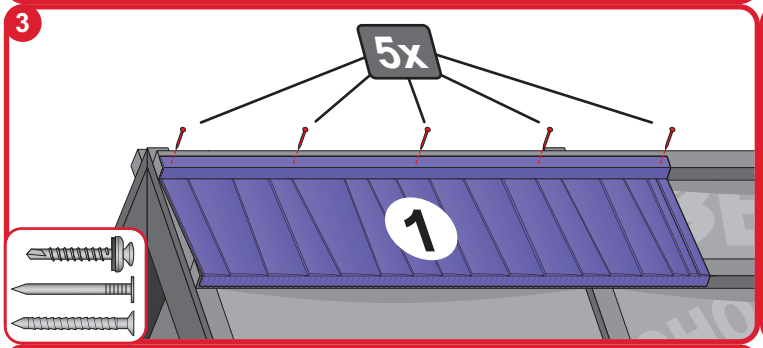

4

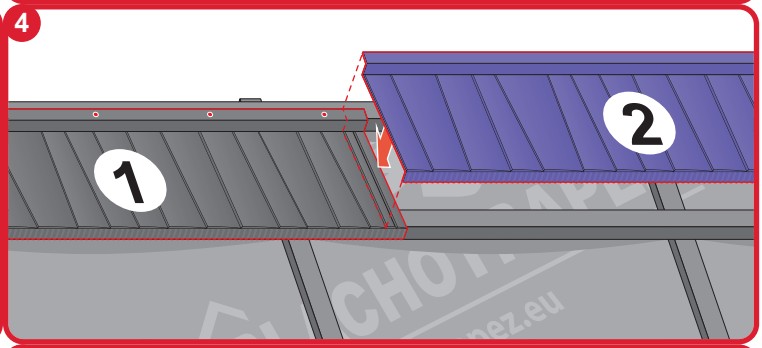

5

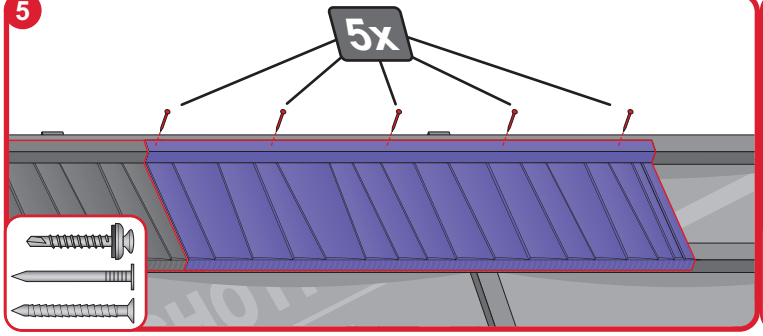

6

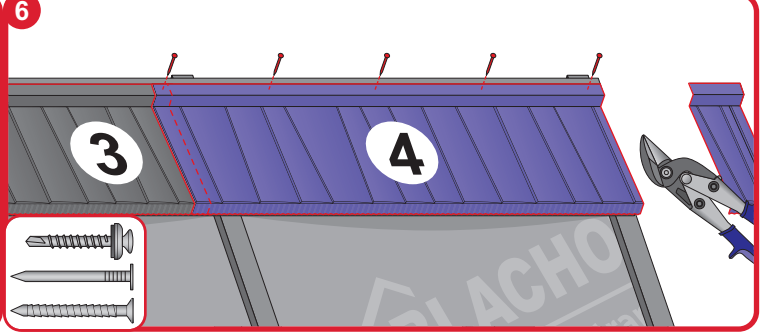

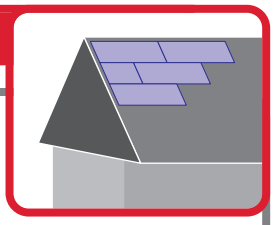

5b

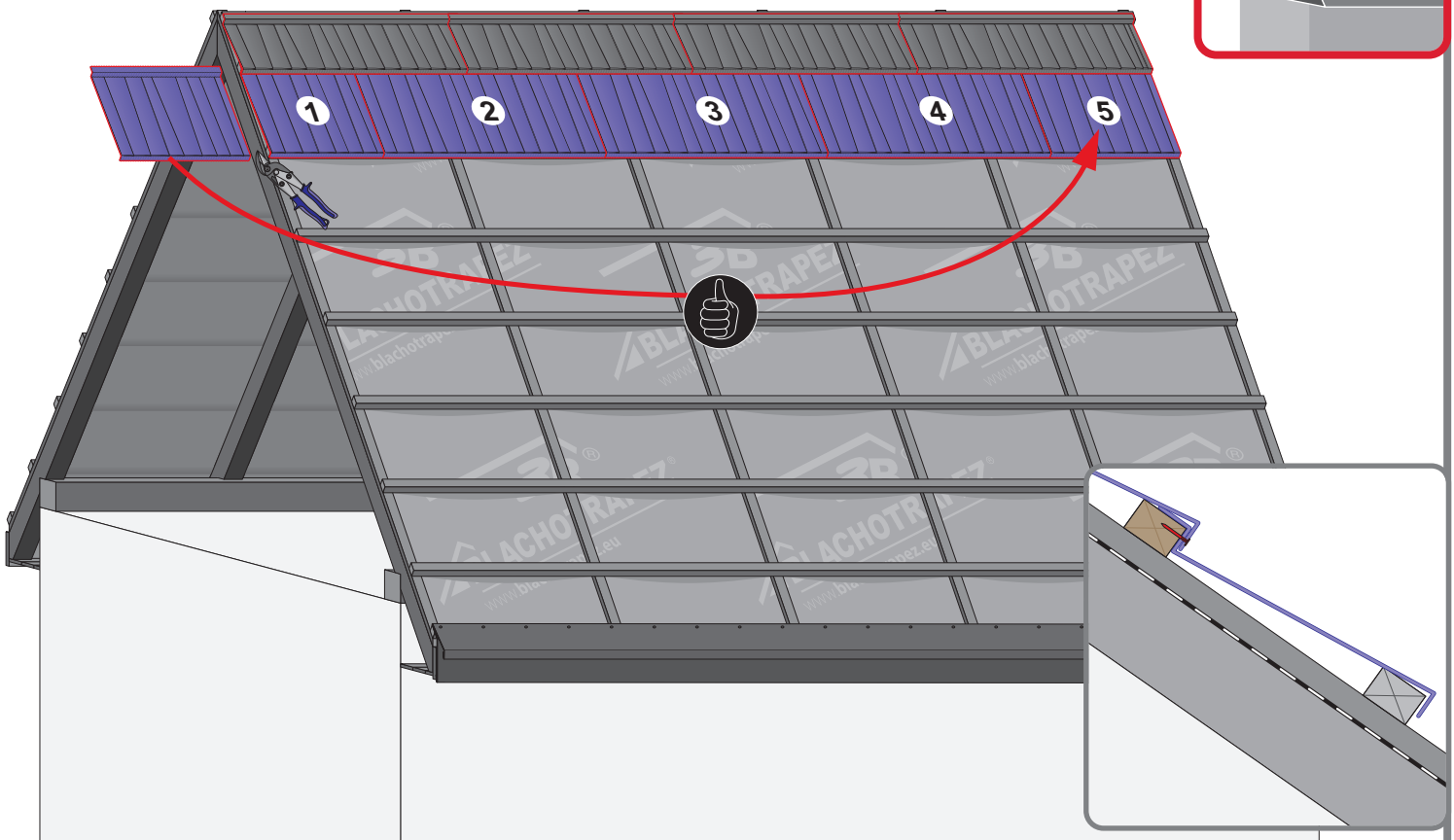

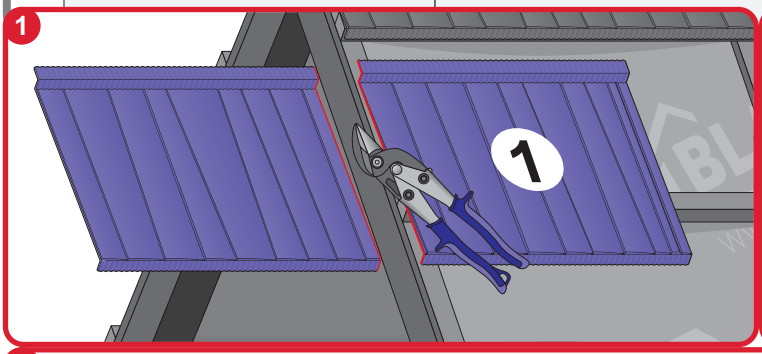

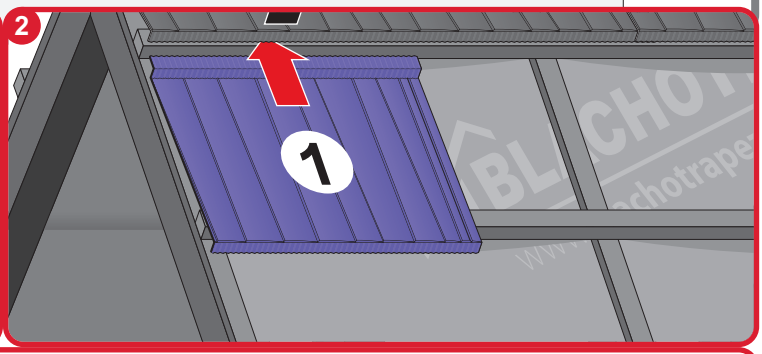

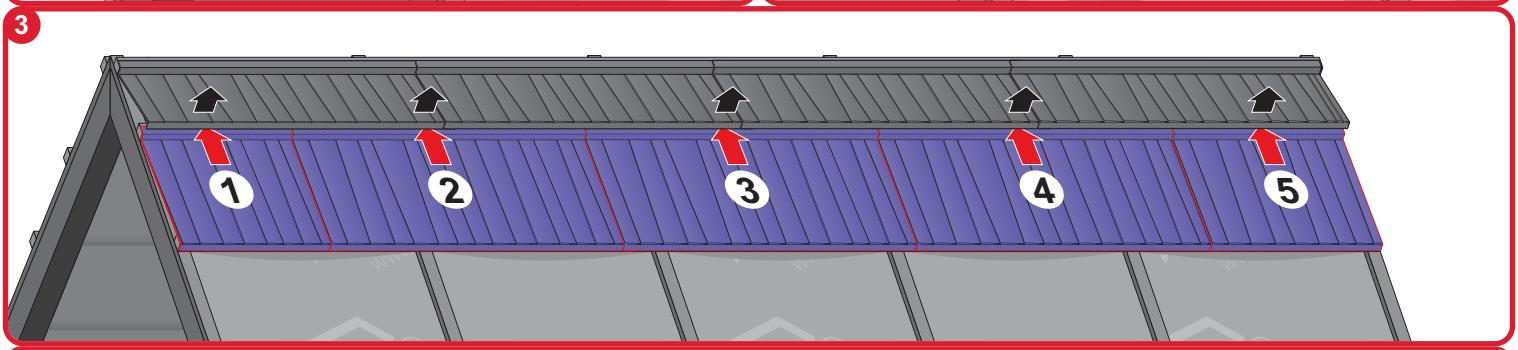

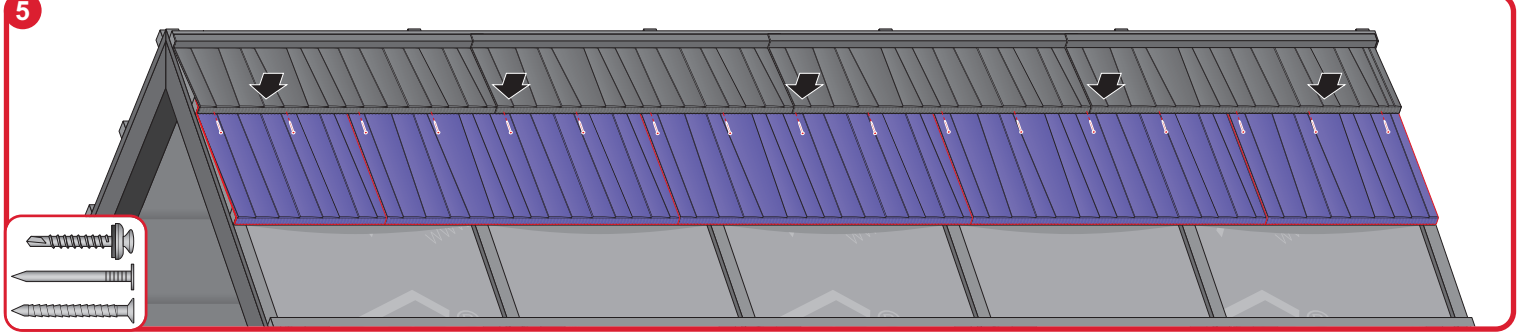

5c

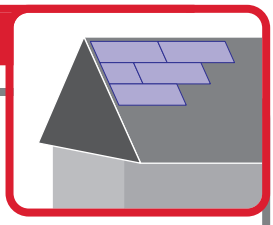

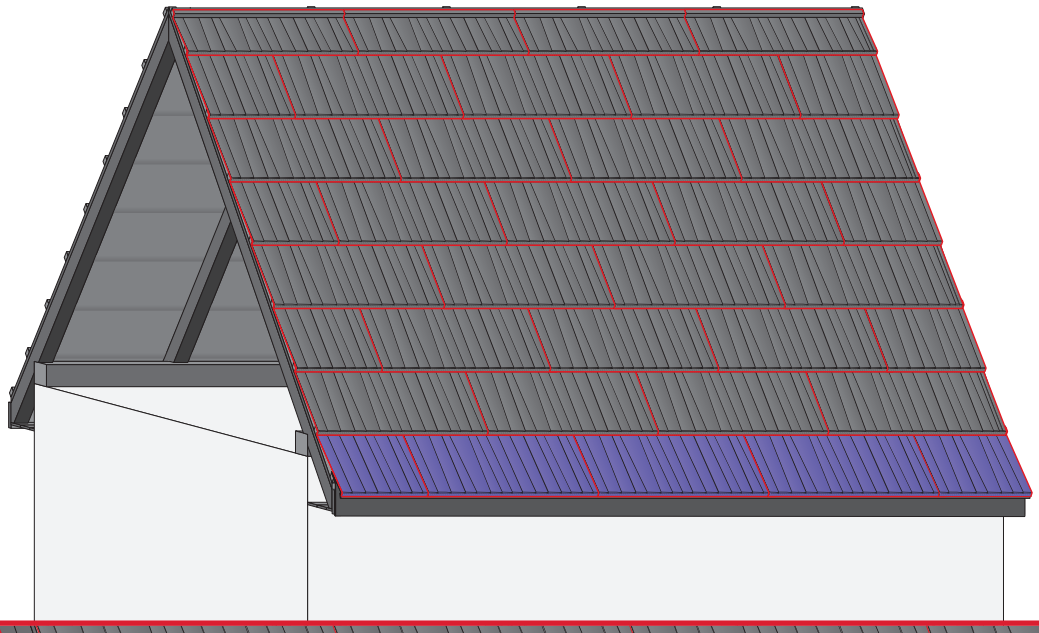

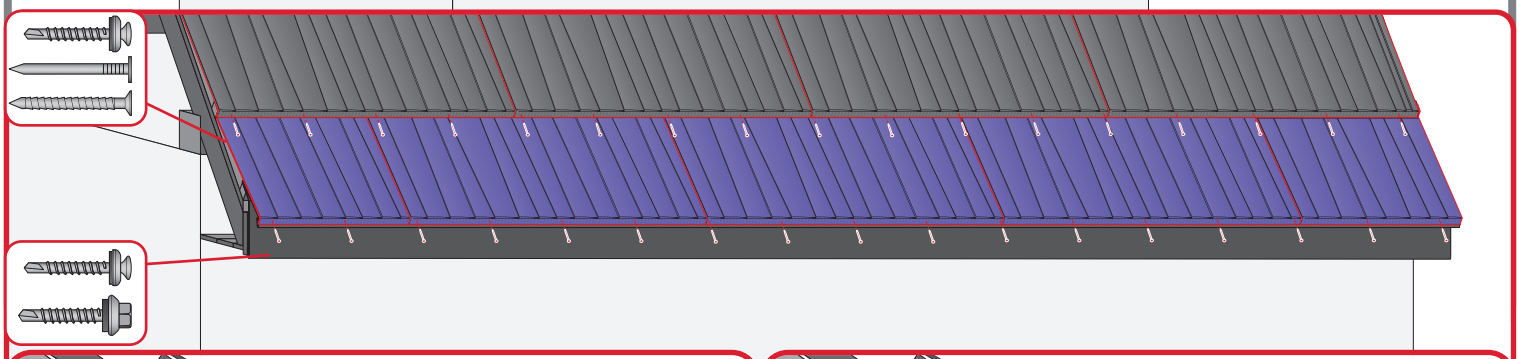

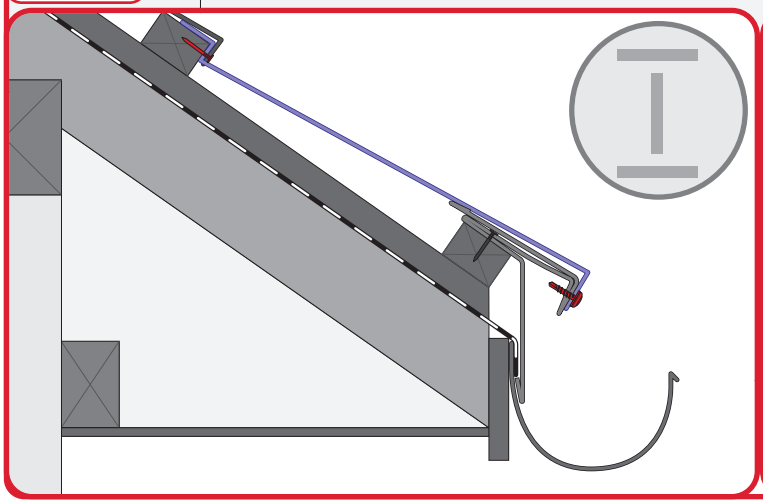

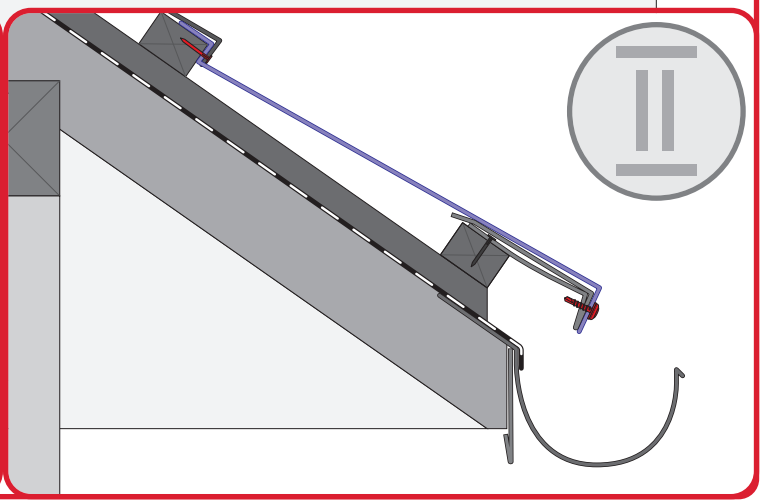

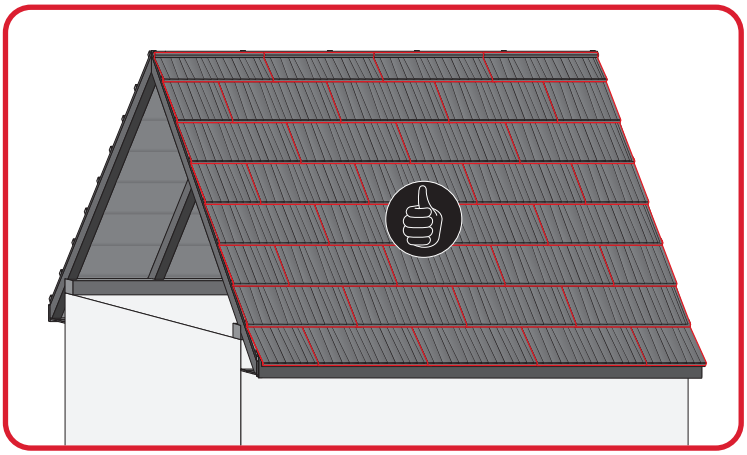

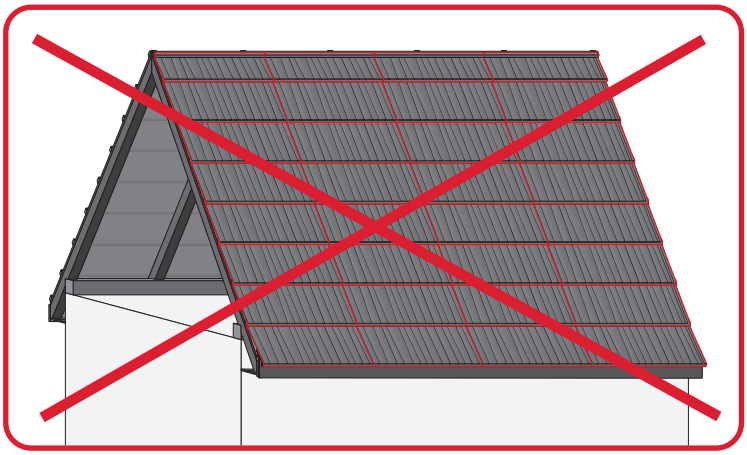

5d

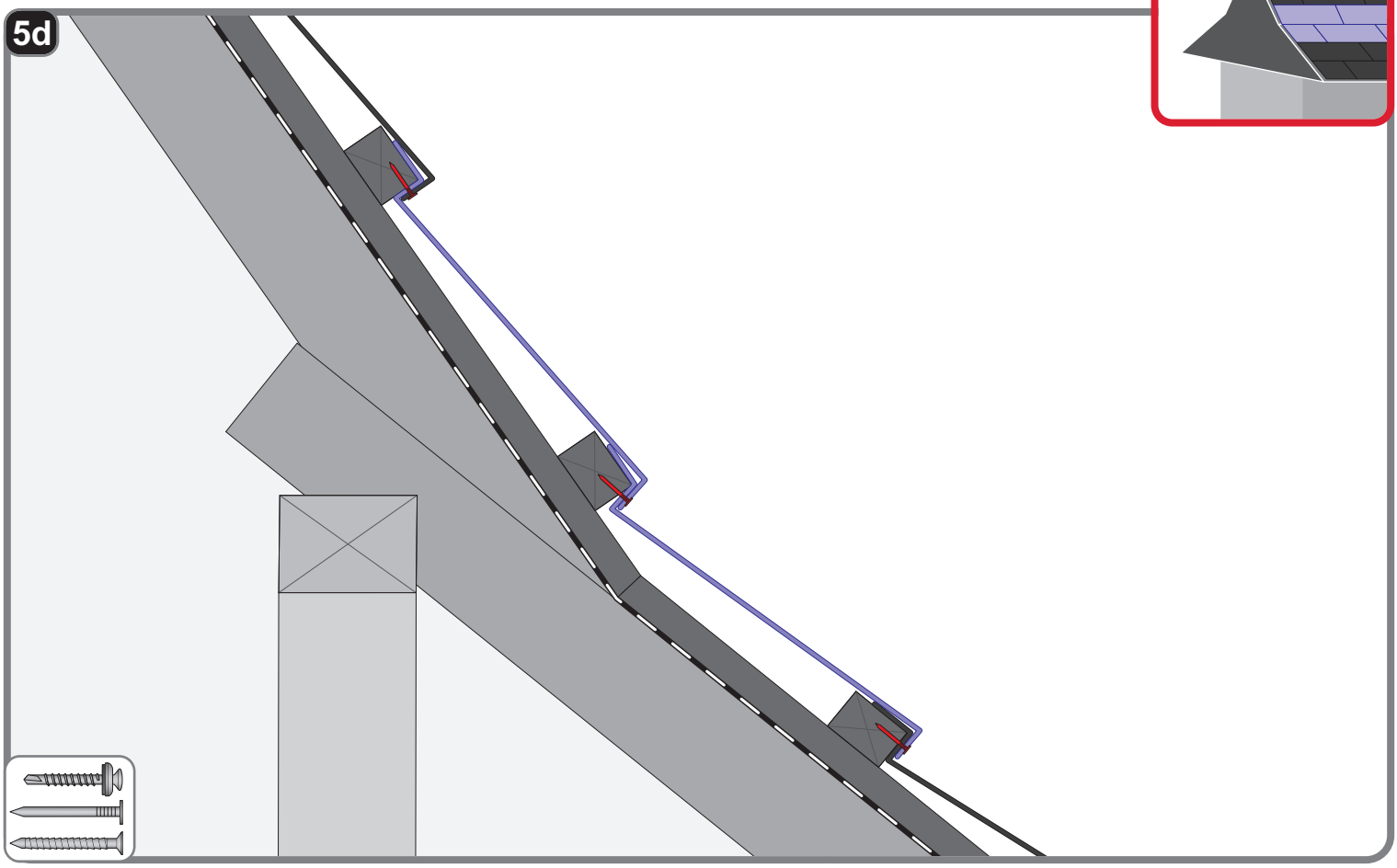

5e

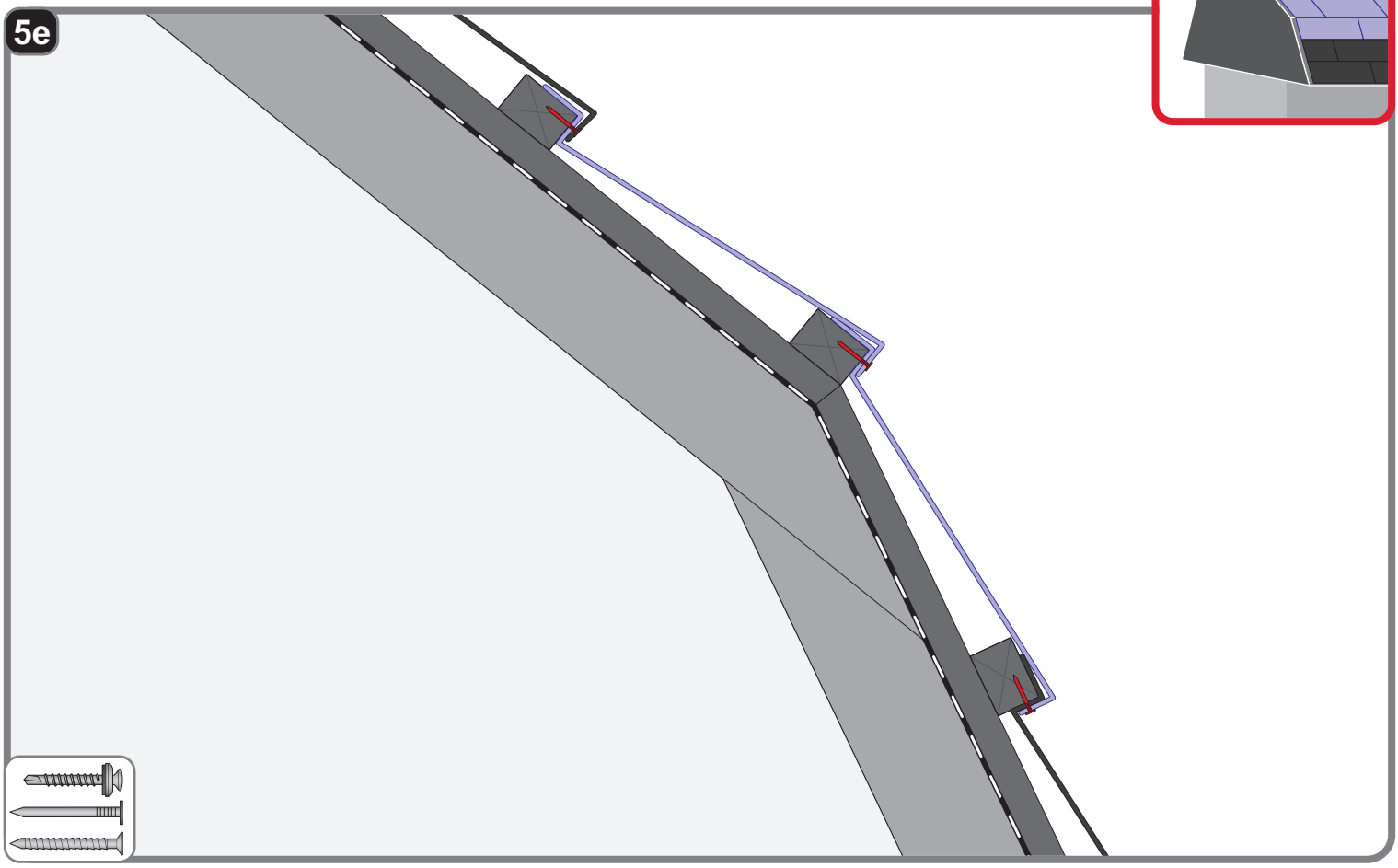

6a

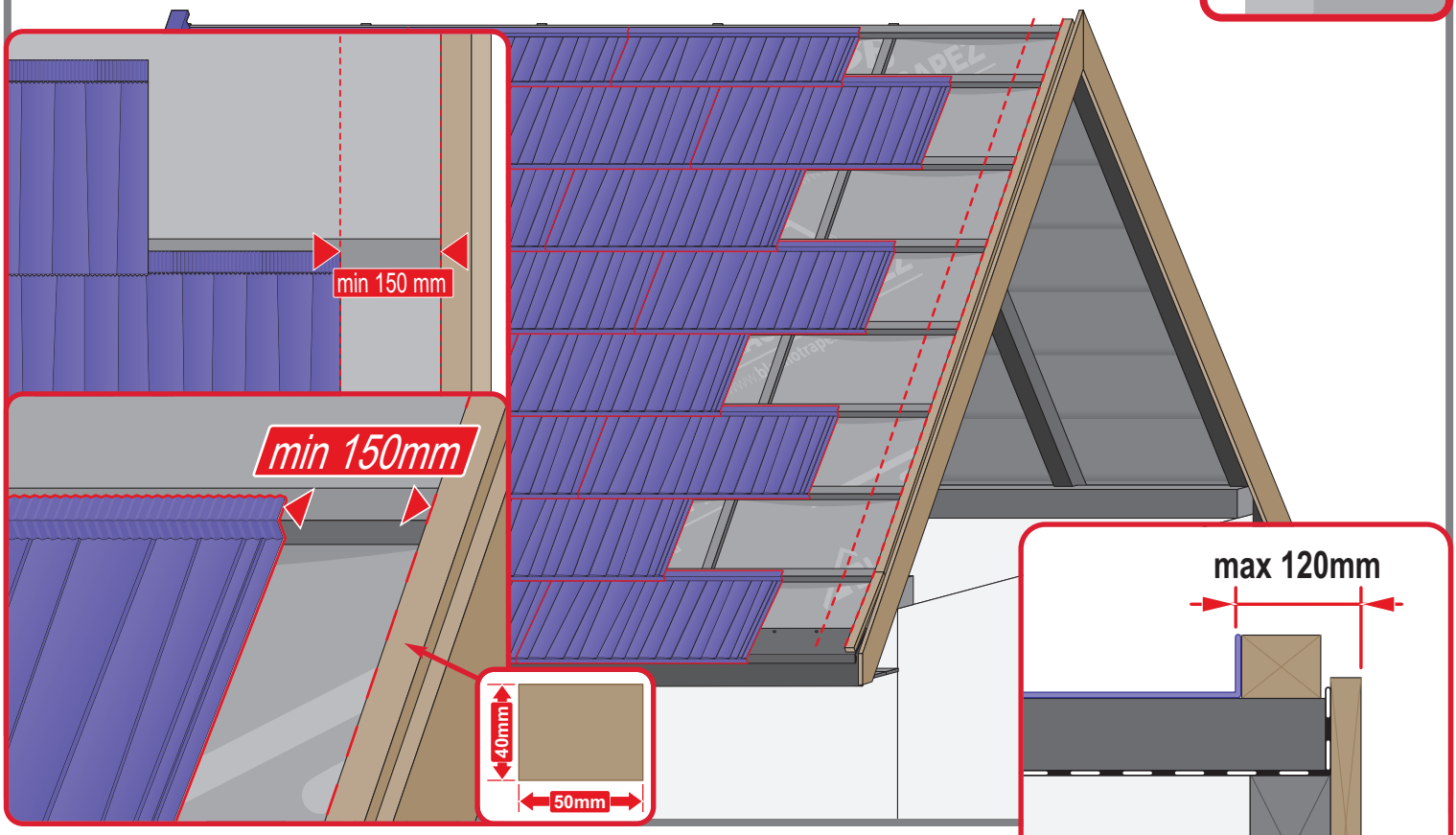
min 150 mm
min 150mm
40mm
50mm
max 120mm

6b

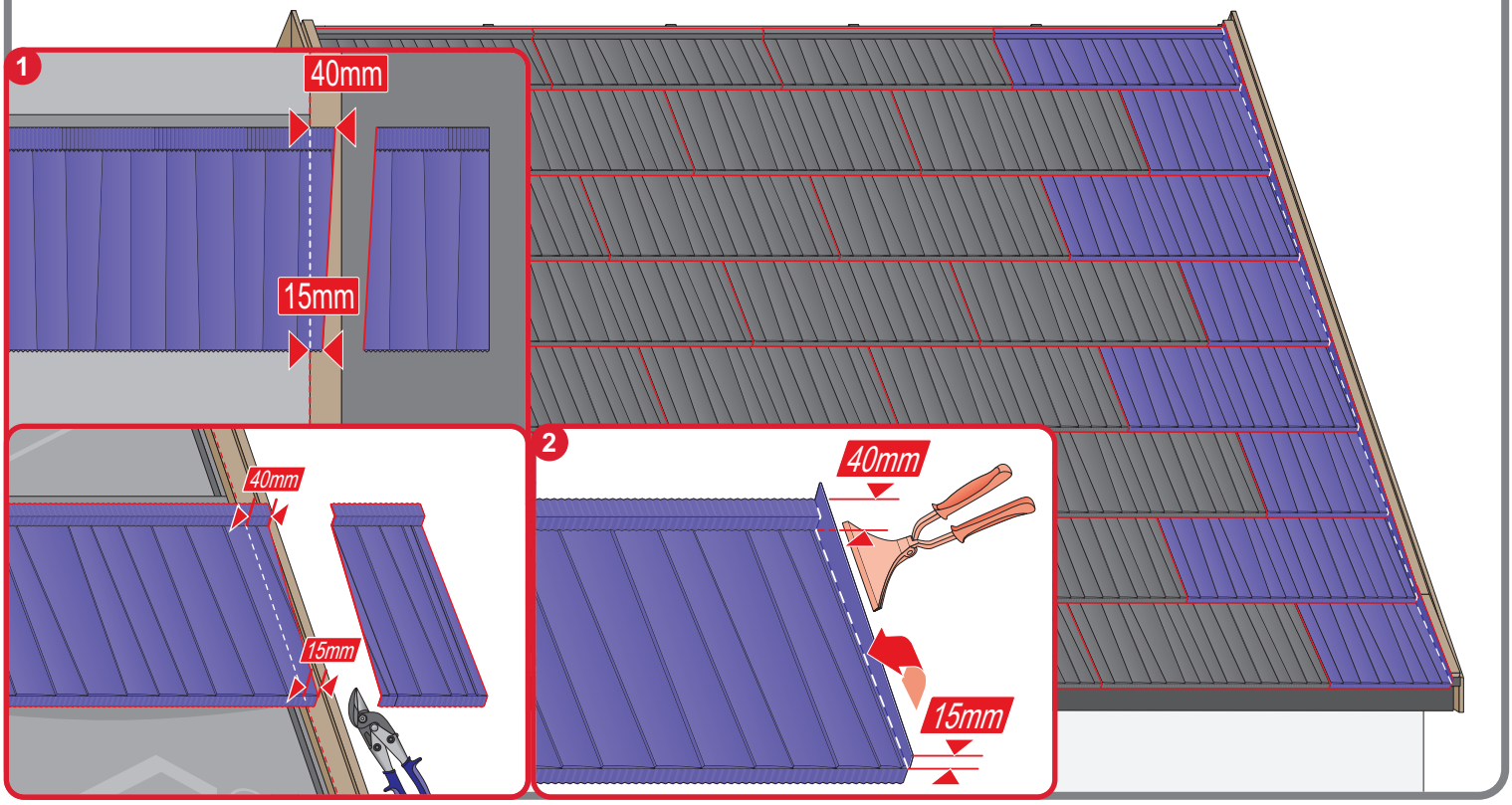
1
40mm
15mm
40mm
15mm
2
40mm
15mm

6c

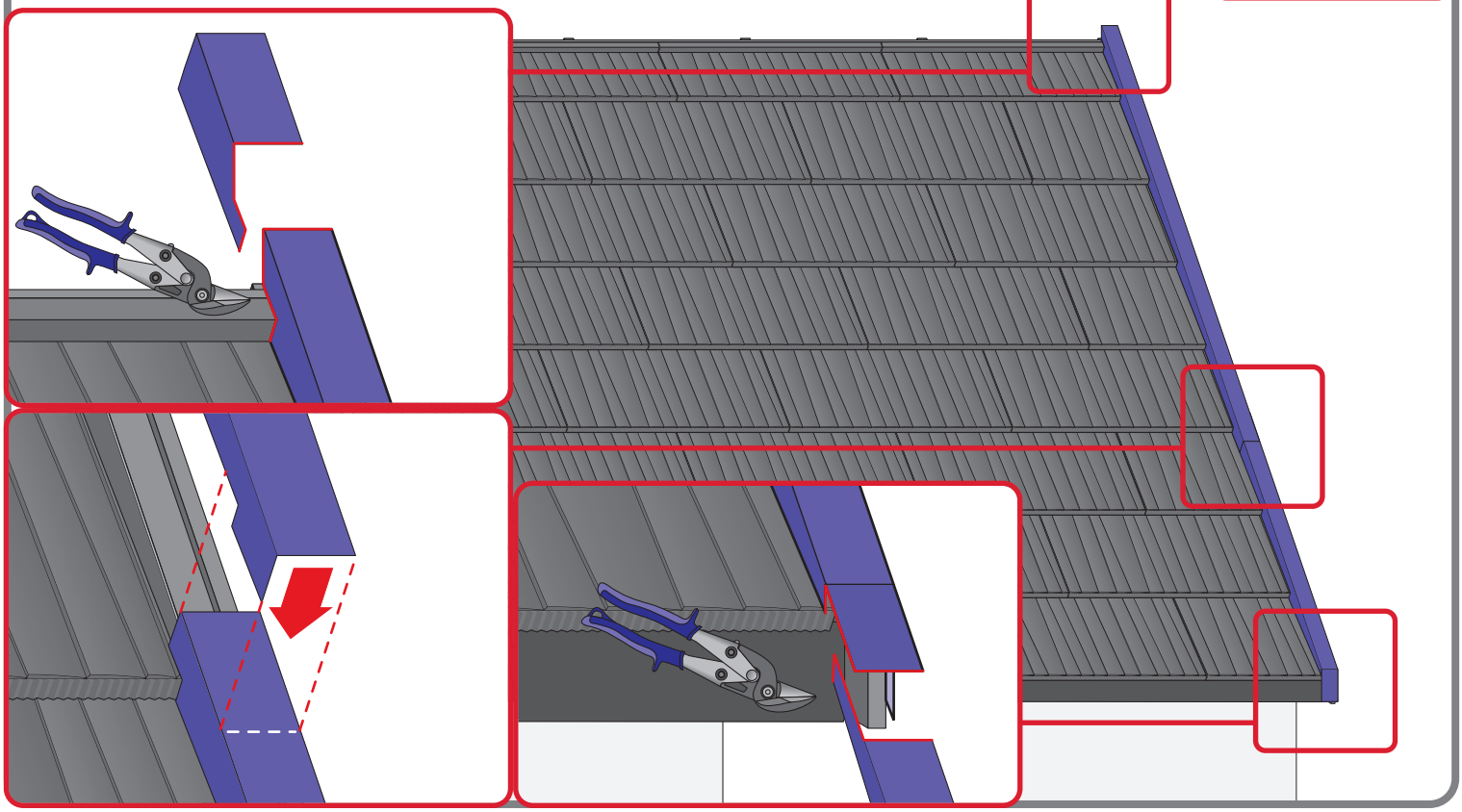

6d

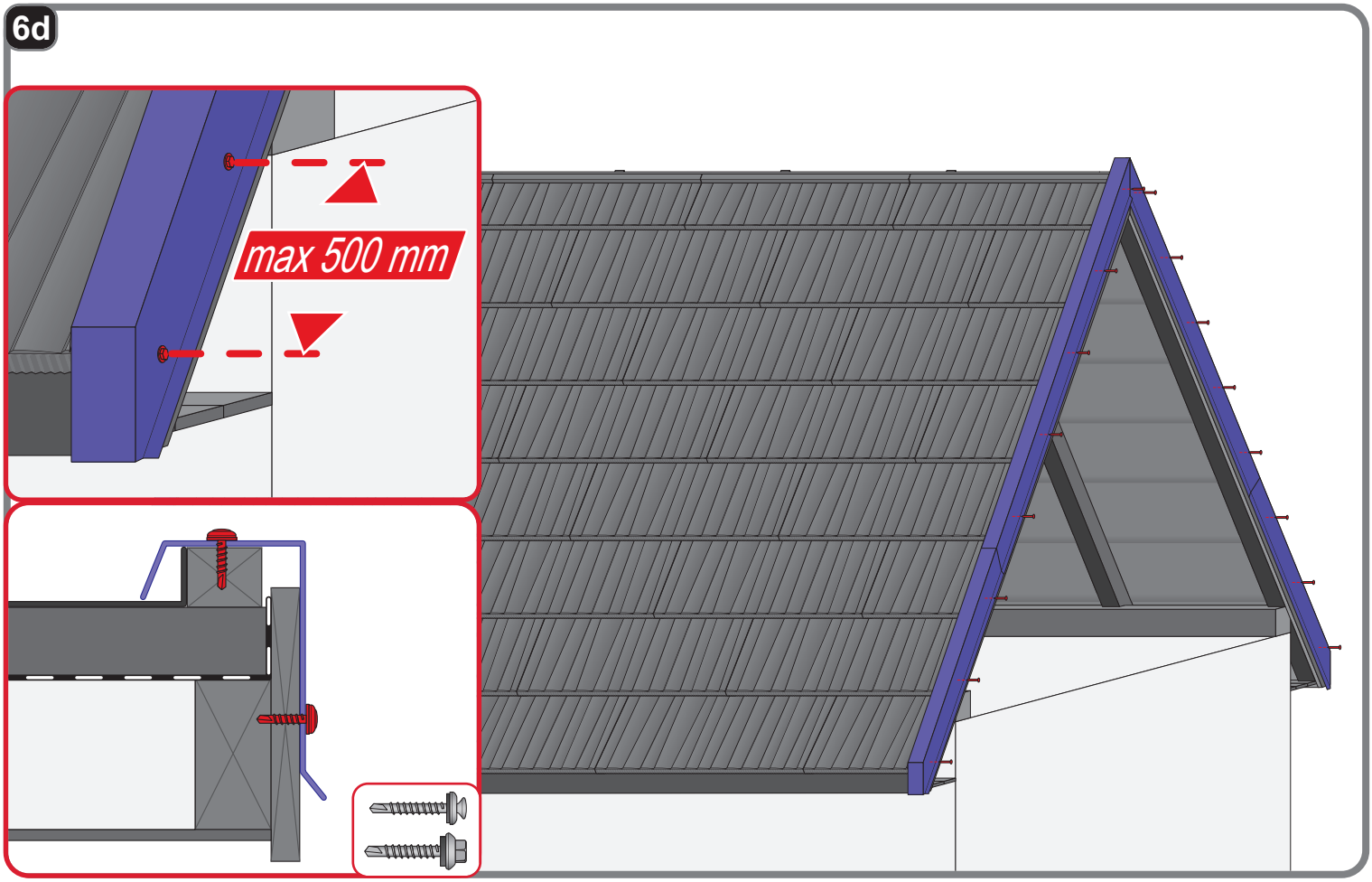

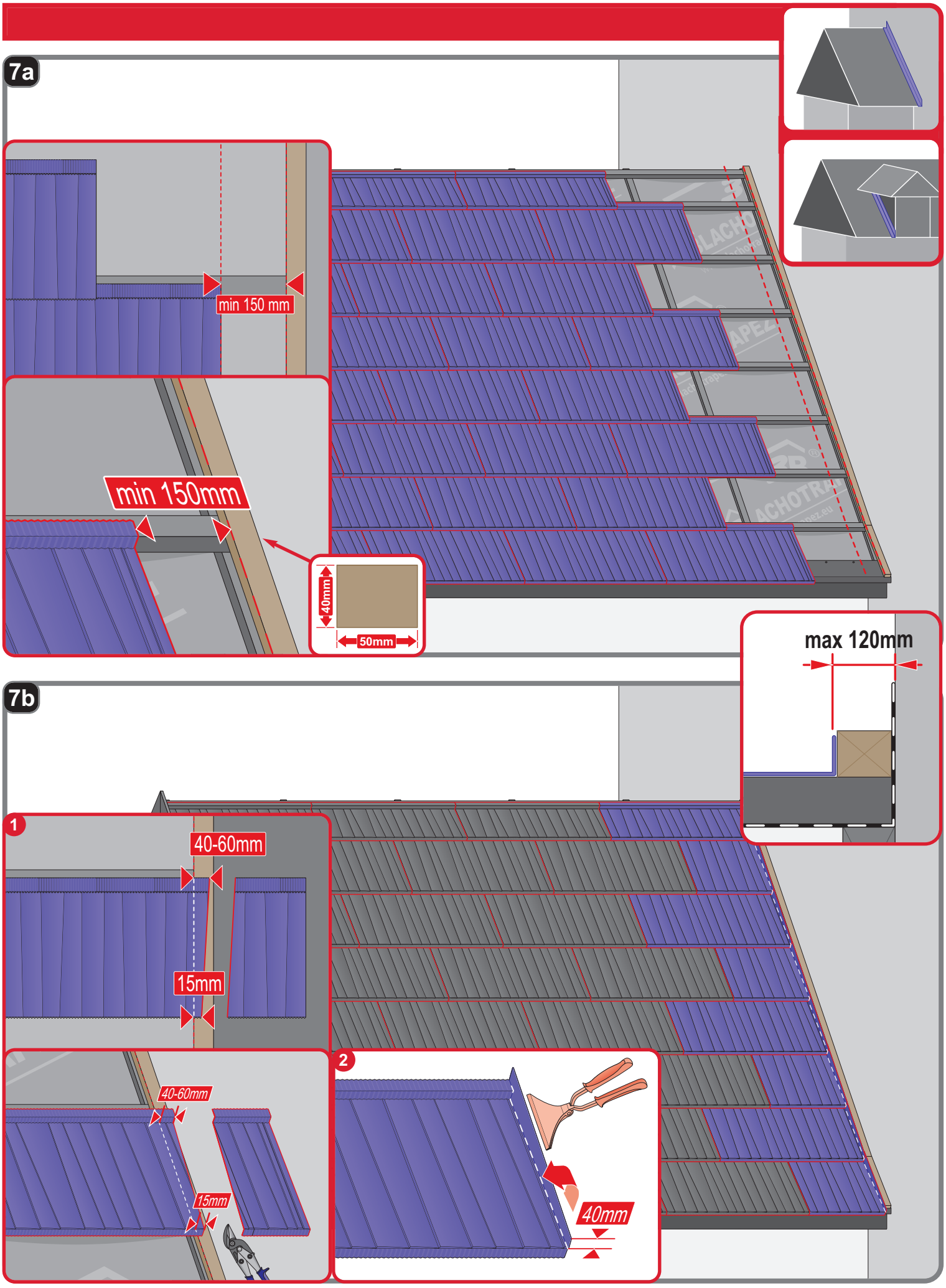
7a
min 150 mm
min 150mm
40mm
50mm
max 120mm
7b
1
40-60mm
15mm
40-60mm
15mm
2
40mm

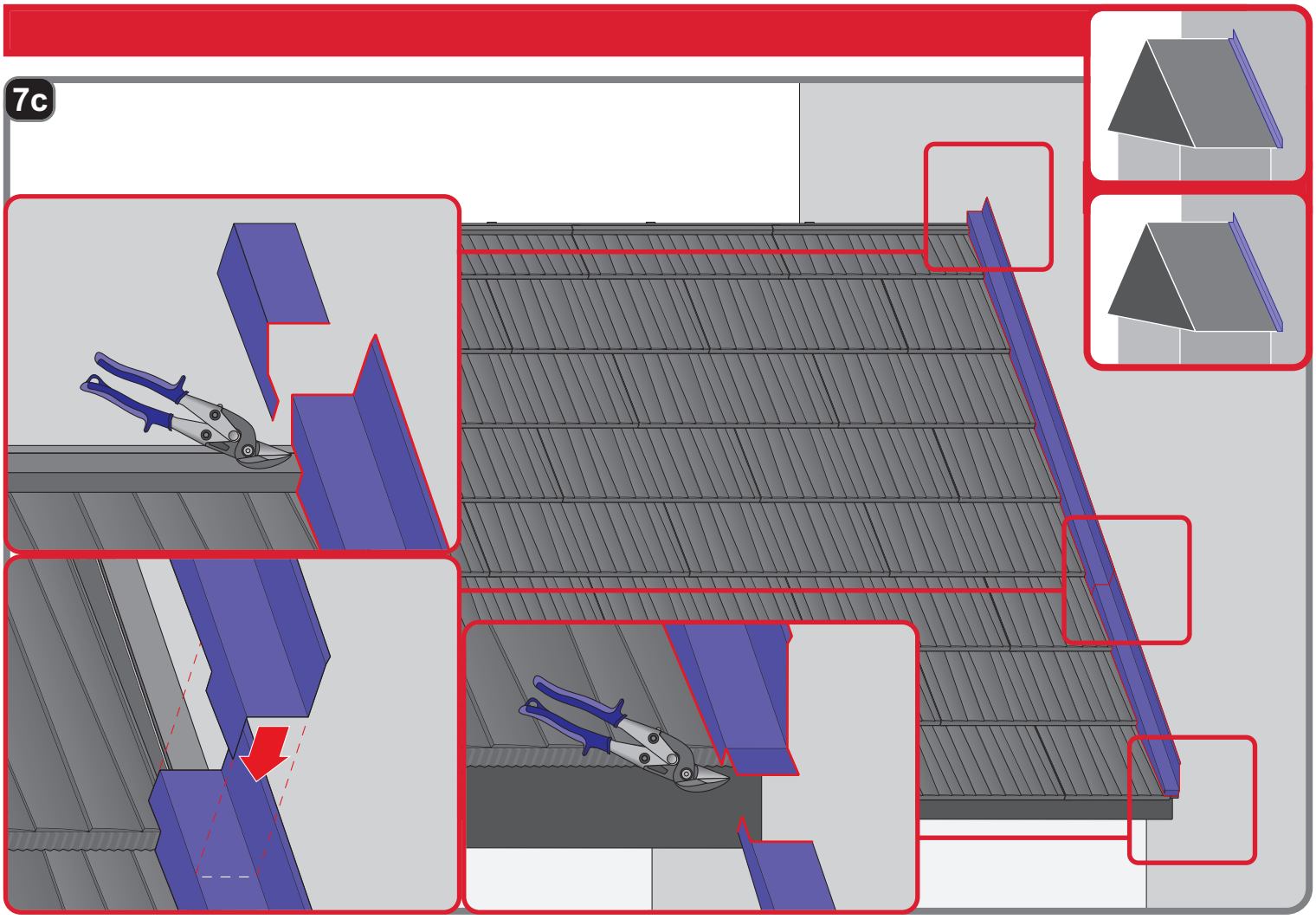
7c

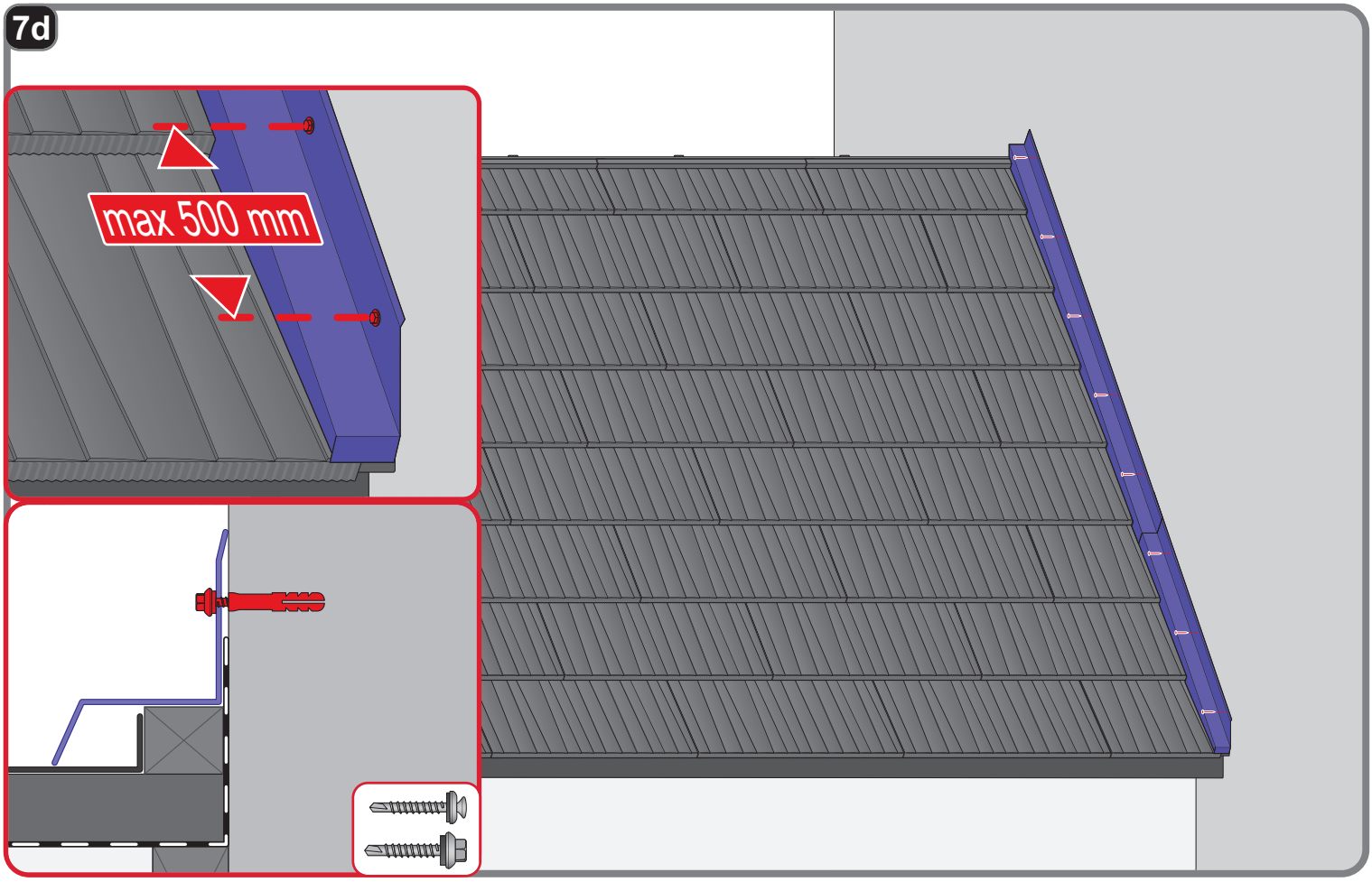
7d
max 500 mm

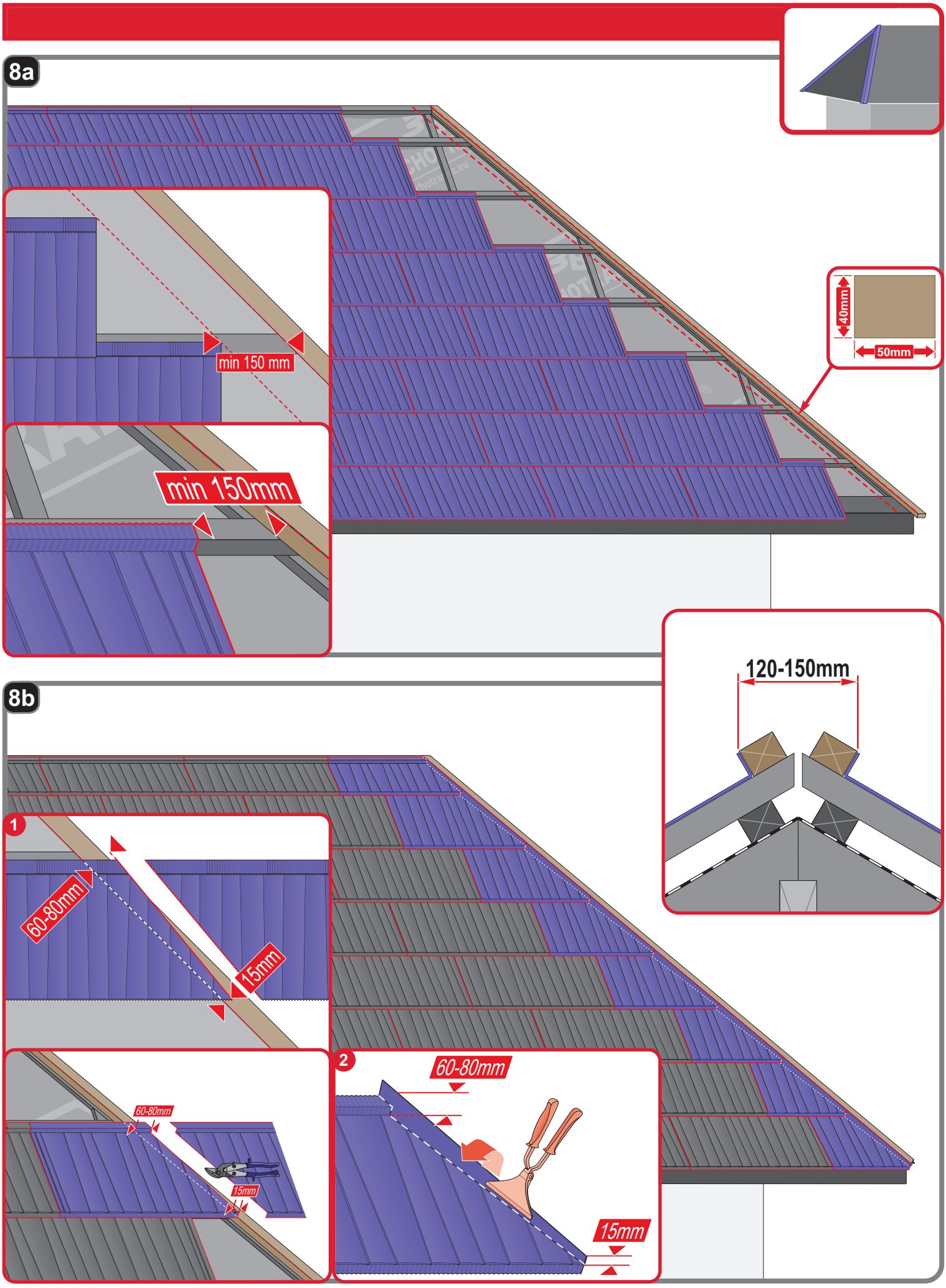
8a
min 150 mm
min 150mm
40mm
50mm
8b
120-150mm
1
60-80mm
15mm
60-80mm
15mm
2
60-80mm
15mm

8c

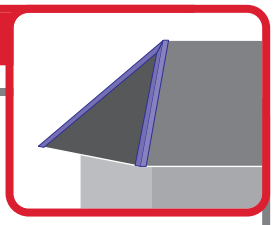

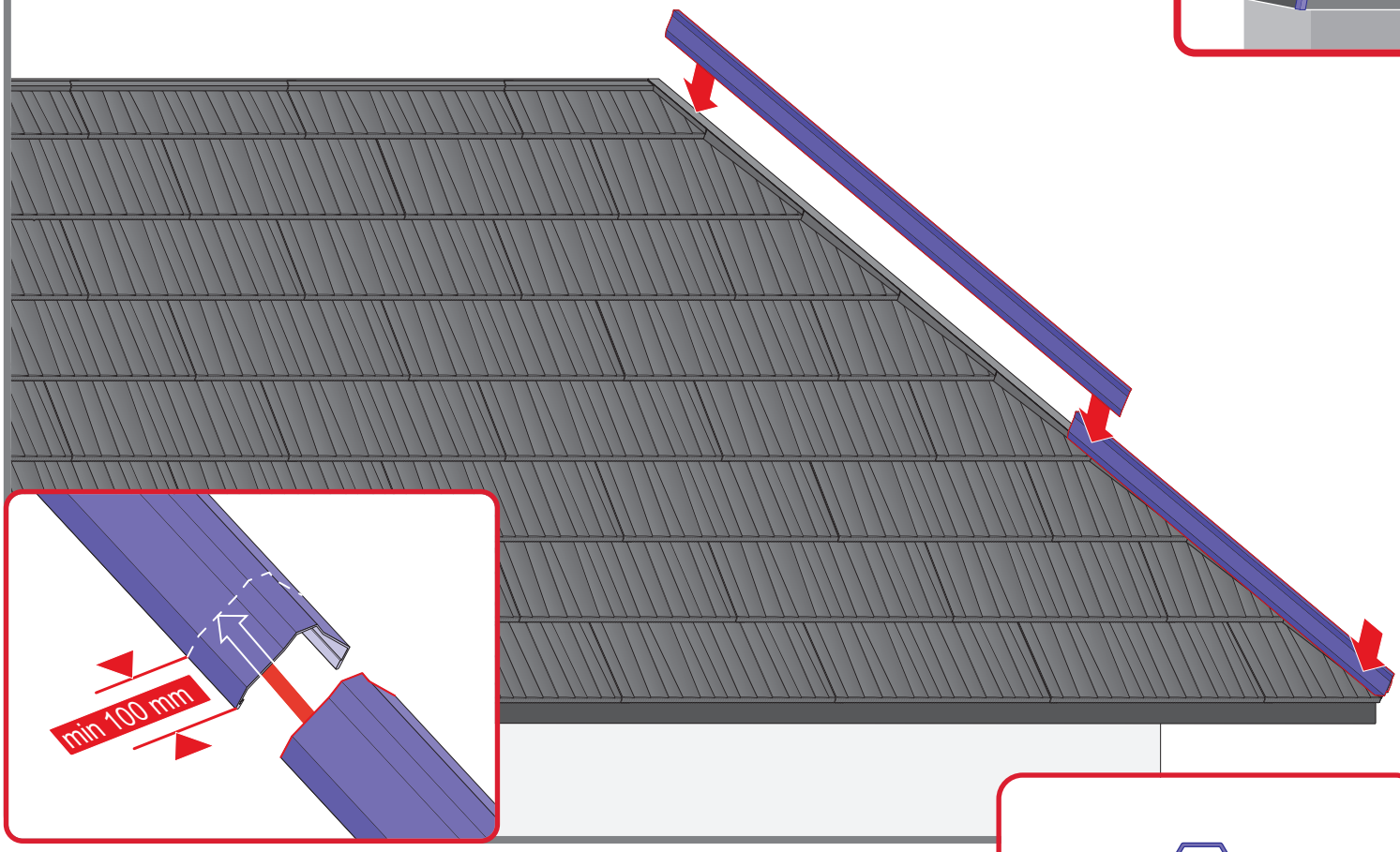

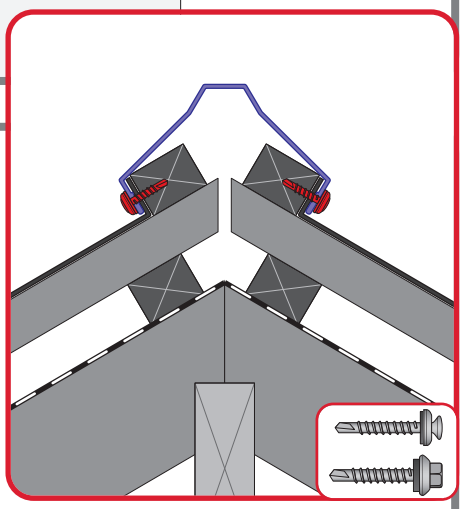

8d

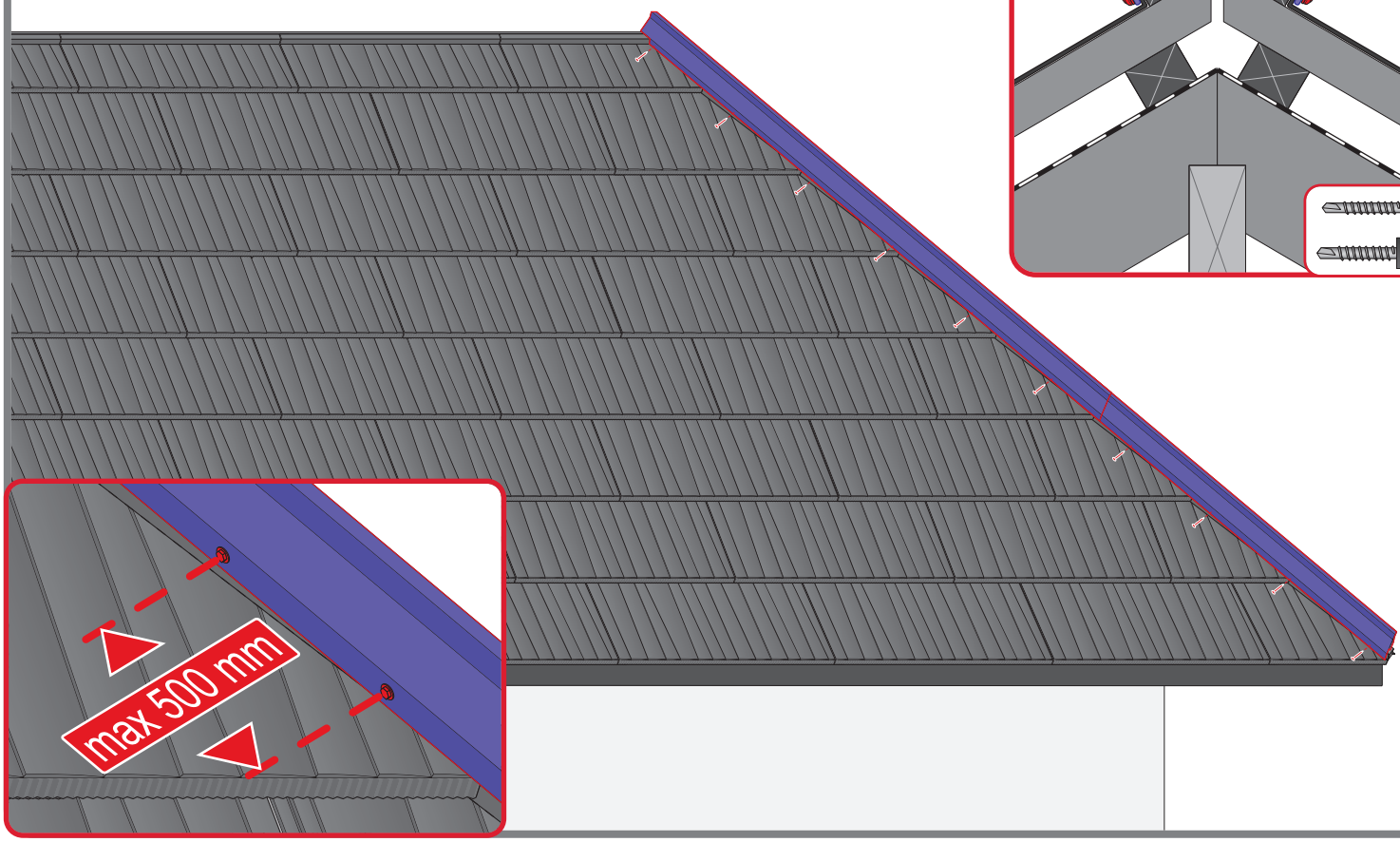

9a

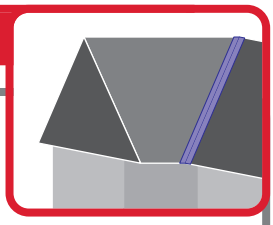

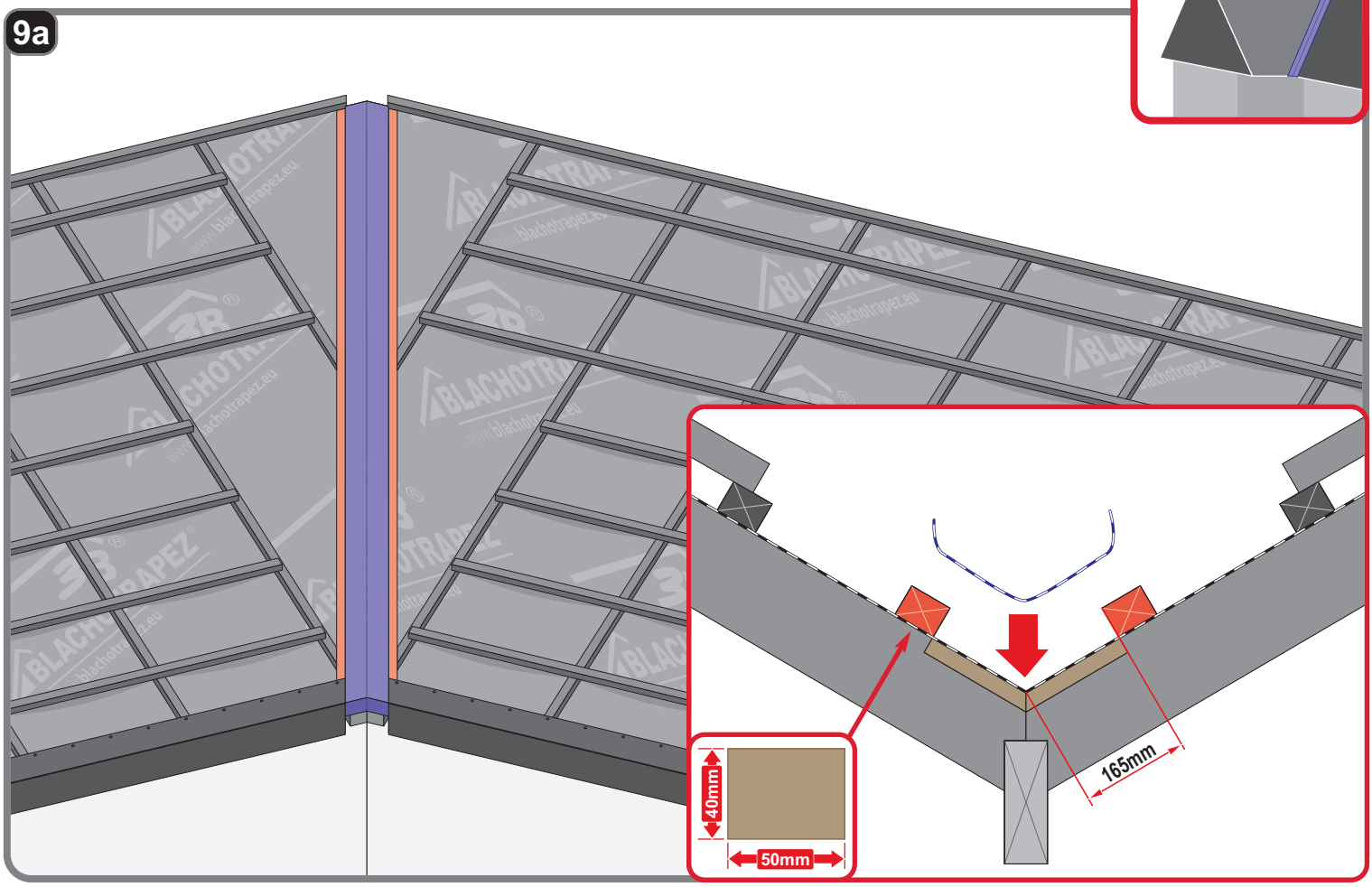

9b

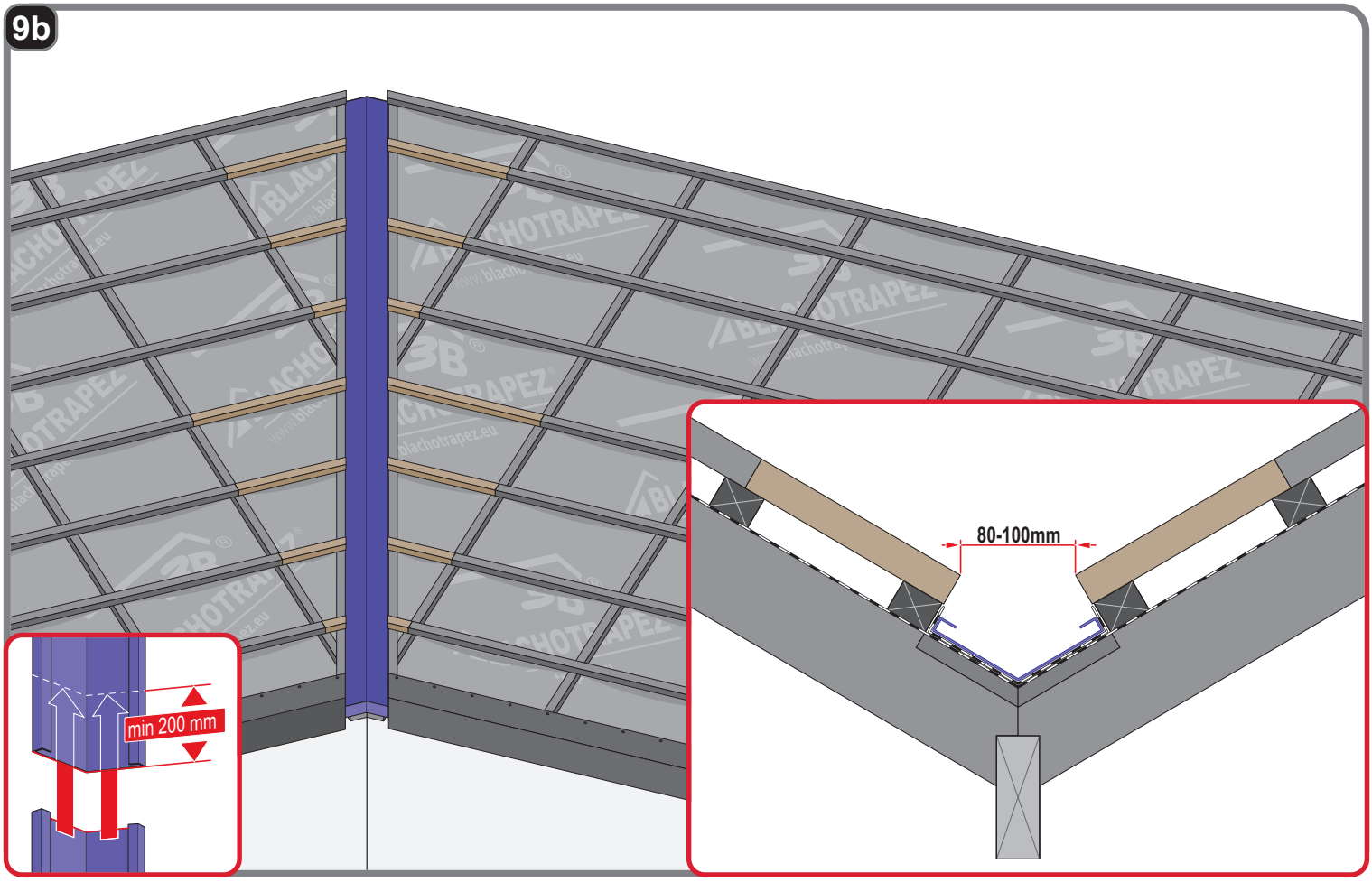

9d

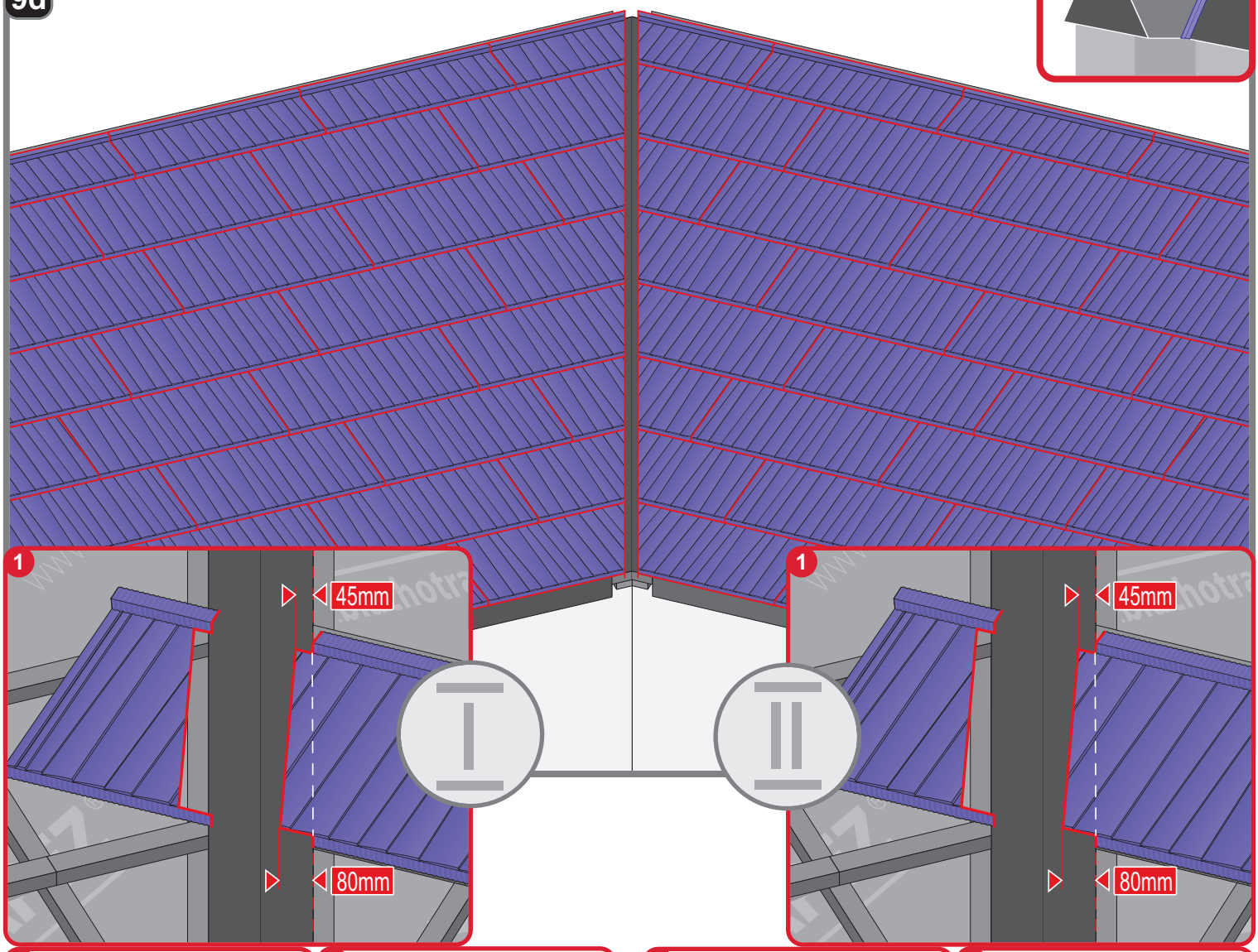

1
45mm
80mm

1
45mm
80mm

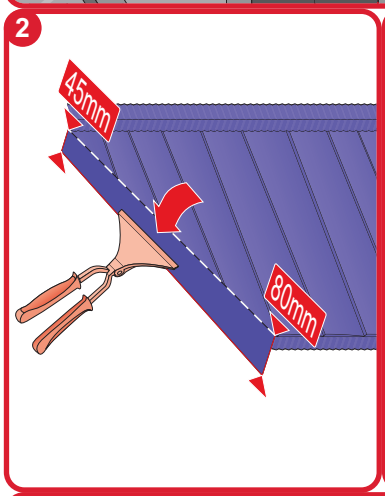
2
45mm
80mm

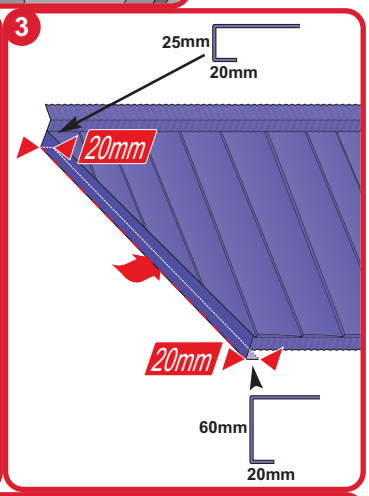
3
25mm
20mm
20mm
20mm
60mm
20mm

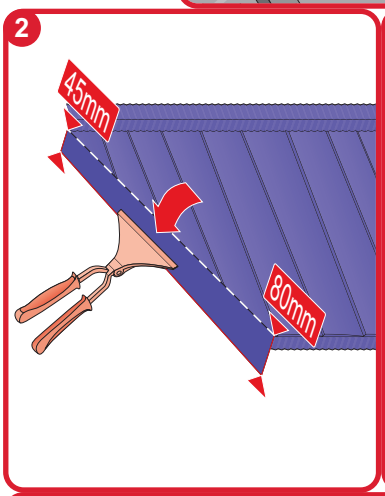
2
45mm
80mm

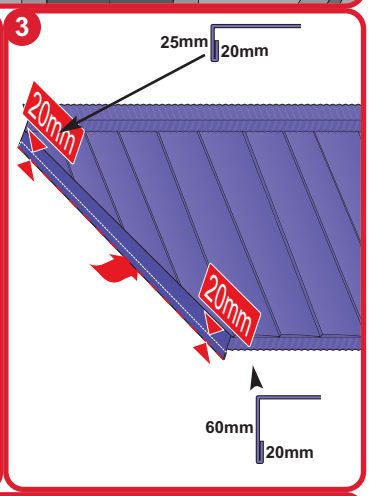
3
25mm
20mm
20mm
20mm
60mm
20mm

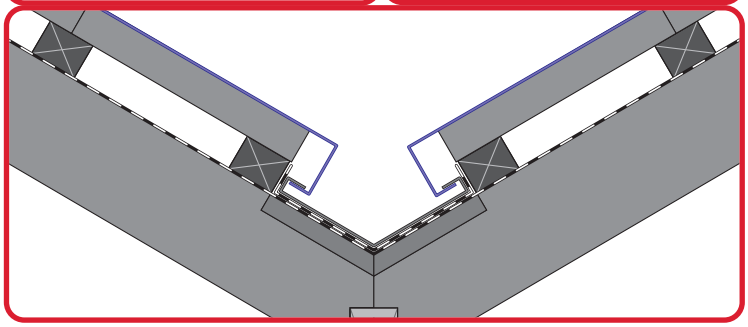

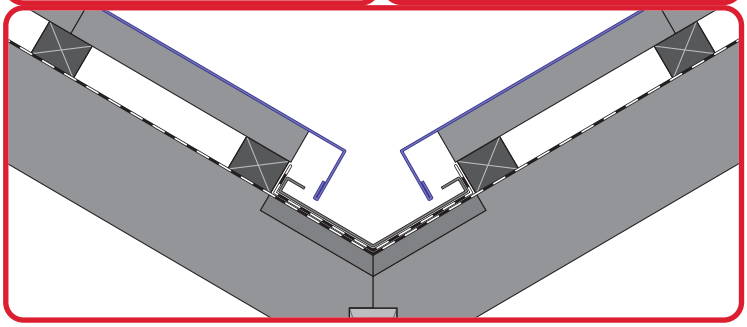

10a

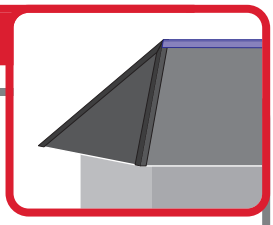

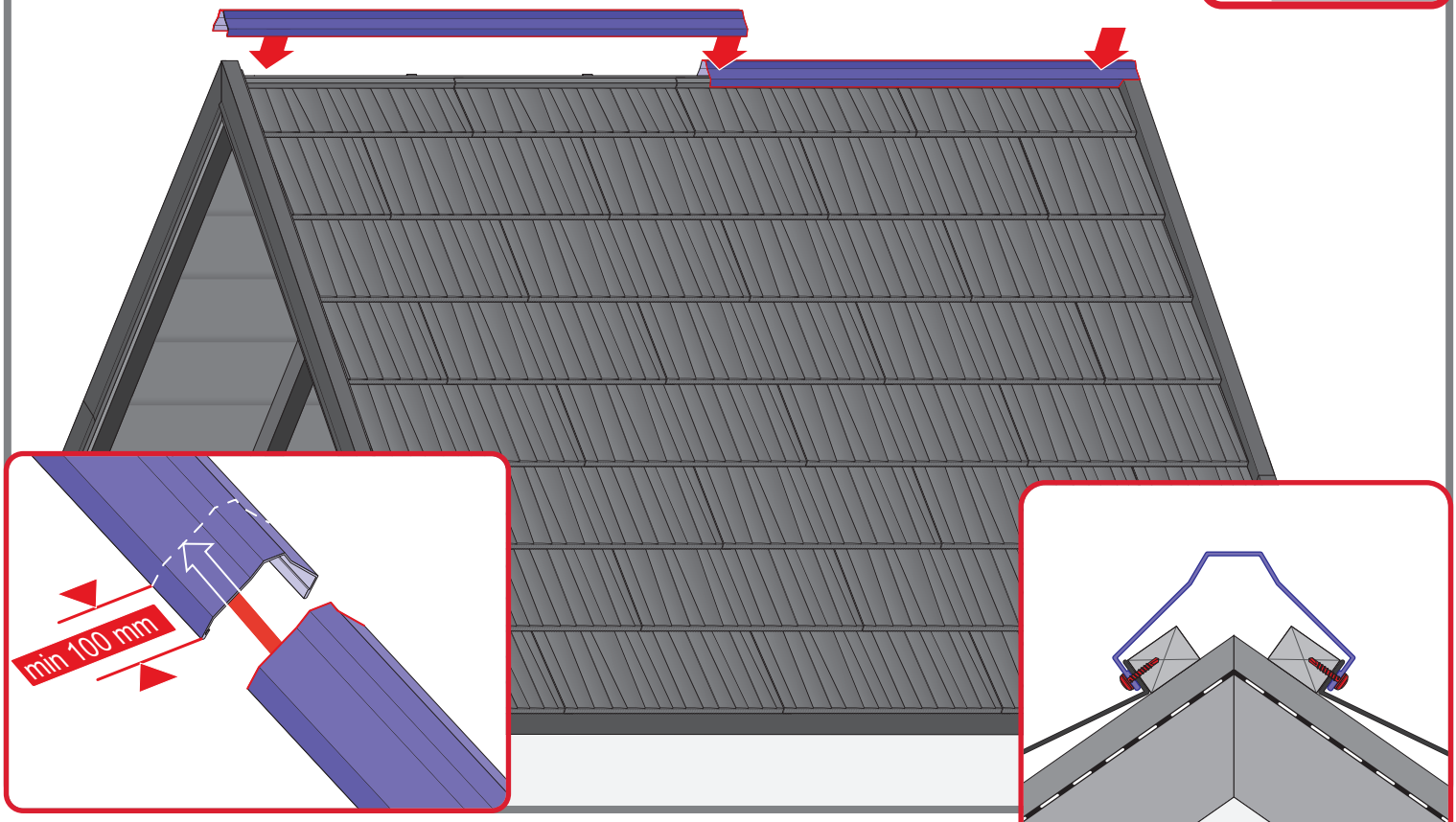

10b

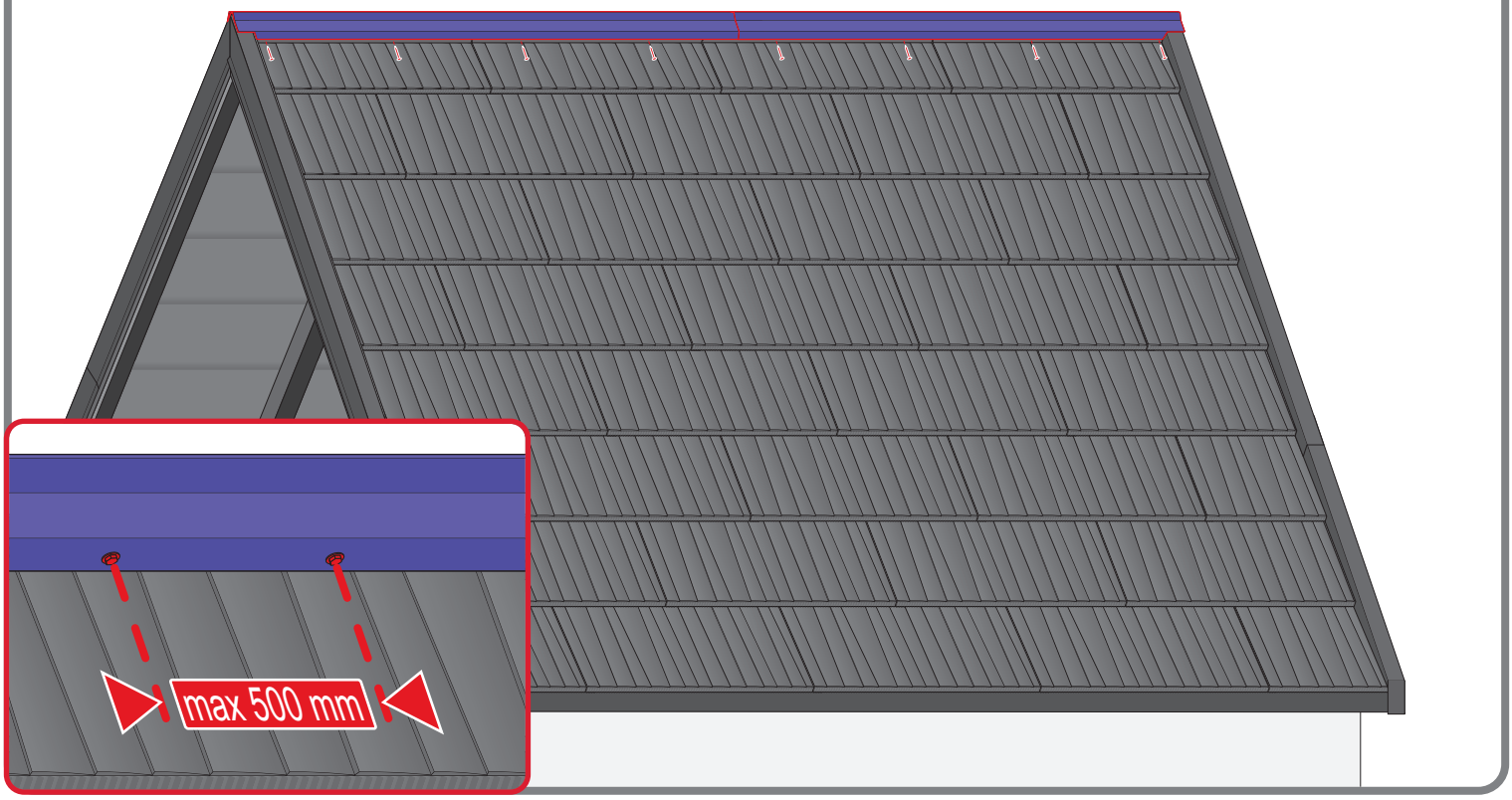

11a

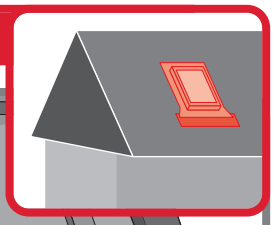

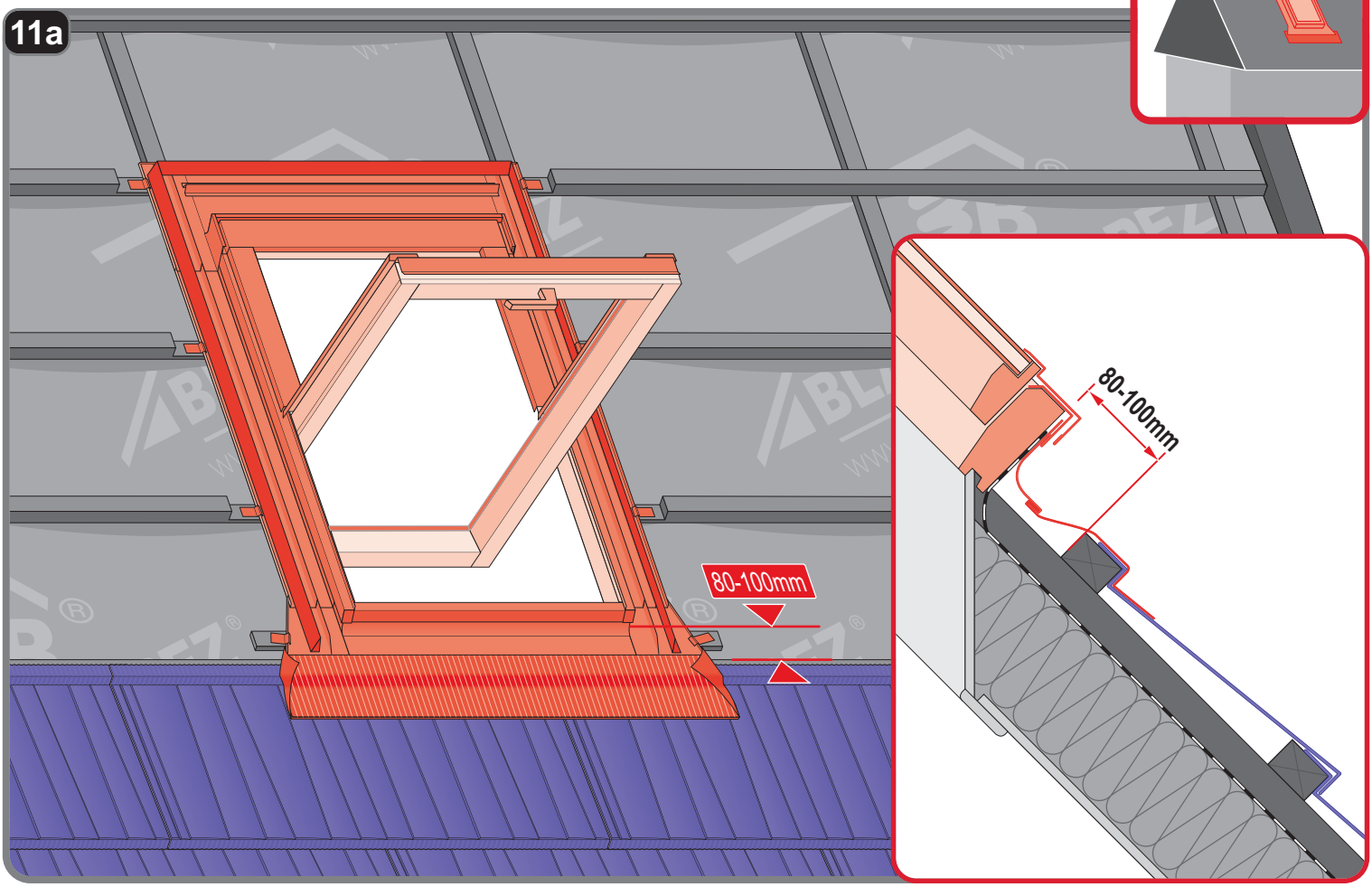

11b

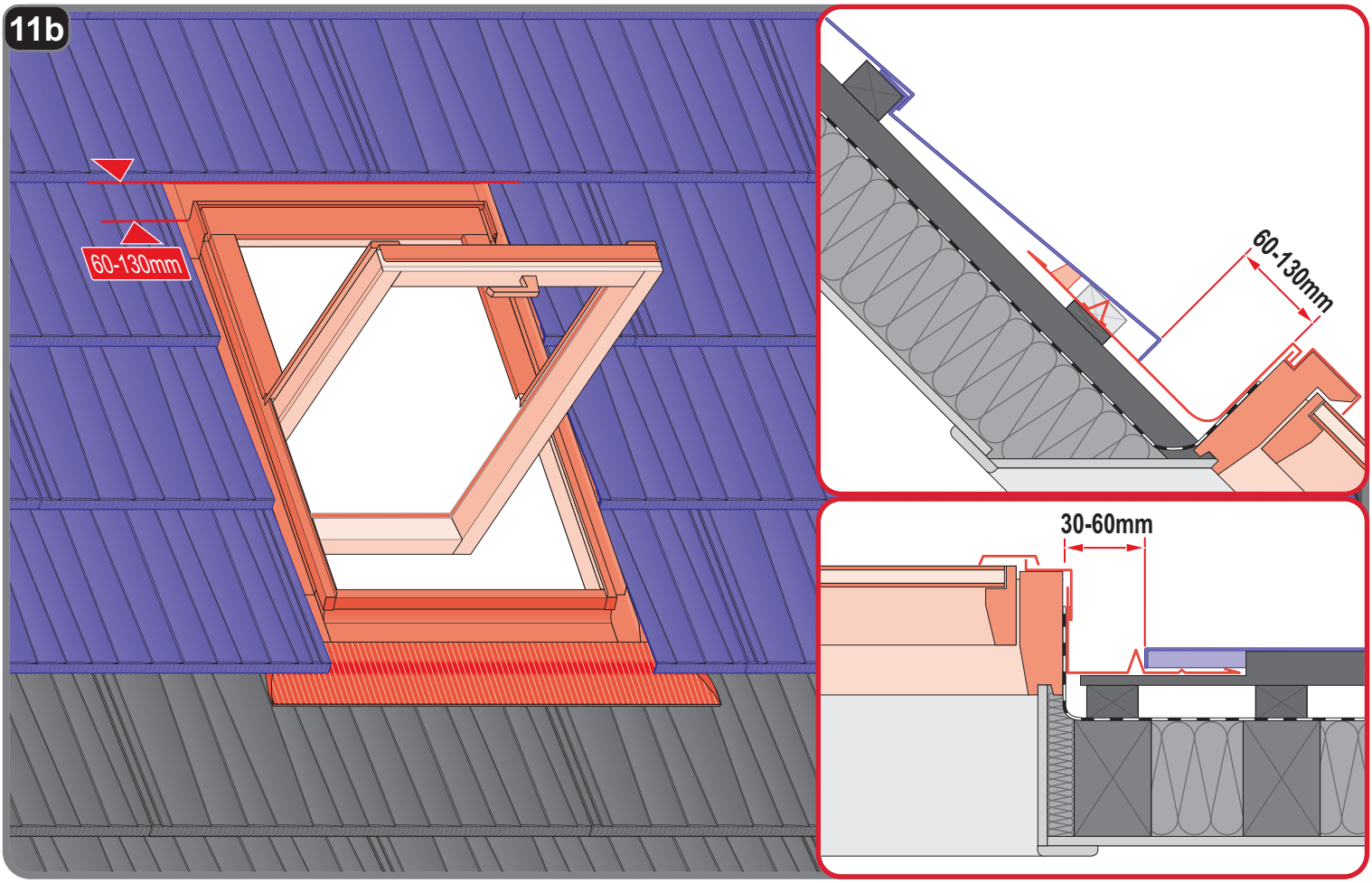

BLACHOTRAPEZ s.r.o.
027 44 Tvrdošín.
ul.Vojtaššákova 604
IČO: 36423416 / DIČ: SK2021879541
www.blachotrapez.eu
velkoobchod@blachotrapez.sk
tel. +421 43 43 92 096